MULTISPAN

Measurement & Control with optimum performance

Since 1986

Temperature Controller
Process Instruments
Timers & Counters
Power & Energy Meters
Protection Relays

Product Catalog 2022

Applications

PHARMACEUTICAL APPLICATIONS

ELECTRICAL PANELS

PLASTIC INDUSTRIES

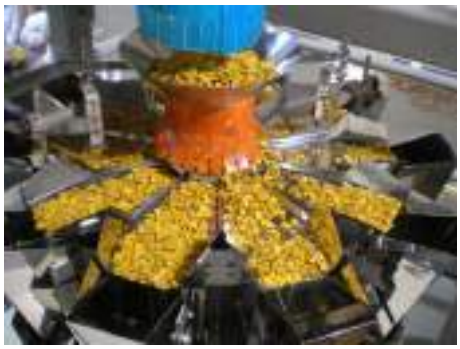

FOOD PROCESSING

TEXTILE INDUSTRY

INDEX

Process Control Instruments	Pg-01
Temperature Controllers	Pg-08
Programmable Timers	Pg-19
Programmable Counters	Pg-22
Protection Relay	Pg-29
Power & Energy Meters	Pg-33
Jumbo Displays	Pg-39

PROCESS CONTROL INSTRUMENT

8 CHANNEL SCANNER WITH RS-485 MODBUS CONNECTIVITY

8 Channel Indicator

		MS-1208	MS-1208A
MODEL		**MS-1208**	**MS-1208A**
Dimension (HxWxD) mm		96 x 96 x 52	96 x 96 x 52
Panel Cutout (mm)		92 x 92	92 x 92
INPUT	Inputs	J / K / PT-100 2Wire or 3Wire (Configurable)	0-10V DC / 4-20mA DC / 0-20mA DC (Configurable)
	Range	**J** (0°C - 400°C), **K** (0°C - 1200°C) , **PT-100 2Wire or 3Wire** (-99.9°C - 400.0°C)	(-999 to 9999)
OUTPUT	Output	RS-485 MODBUS Communication (Optional)	
SPECIFICATION	Accuracy	±1% of FSD	
	Supply	100-270V AC (SMPS), 50/60 Hz	

8 CHANNEL SCANNER WITH RS-485 MODBUS CONNECTIVITY

Upto 4 Relay Outputs, Data Logging with Pen Drive compatibility (USB)

USB Pendrive Compatible

		MS-1248	MSU-1248U
MODEL		**MS-1248**	**MSU-1248U**
Dimension (HxWxD) mm		96 x 96 x 52	96 x 96 x 52
Panel Cutout (mm)		92 x 92	92 x 92
INPUT	Inputs	J / K / PT-100 2Wire or 3Wire (Configurable)	J / K / PT-100 2Wire or 3Wire /0 To 10V DC/4 To 20mA DC/ 0 To 20mA DC (Configurable)
	Range	**J** (0°C to 600°C) **K** (0°C to 1200°C) **PT-100 2Wire or 3Wire** (-99°C to 400°C, -99.9°C to 400.0°C)	**J** (0°C - 400°C), **K** (0°C - 1200°C) , **PT-100 2Wire or 3Wire** (-99.9°C to 400.0°C For Temperature I/P) (-999 to 9999 For Analog I/P)
OUTPUT	Output 1	4 Relay with grouping facility	
	Output 2	RS 485 MODBUS Communication (Optional)	
	Output 3	USB Port with Data logging facility(Optional)	
SPECIFICATION	Control Action	ON/OFF	
	Accuracy	±1% of FSD	
	Supply	100-250V AC (SMPS), 50/60 Hz	

PROCESS CONTROL INSTRUMENT

16 CHANNEL SCANNER WITH RS-485 MODBUS & USB CONNECTIVITY

Upto 8 Relay Outputs, Data Logging with Pen Drive compatibility (USB)

MODEL		**MS-5716RU-M1**
Dimension (HxWxD) mm		192 x 96 x 165
Panel Cutout (mm)		188 x 92
INPUT	Sensor Input	J / K / PT-100 2Wire or 3Wire
	Analog Input	0-10V DC / 4-20mA DC/ 0-20mA DC (Configurable)
	Range	**J** (0°C - 400°C), **K** (0°C - 1200°C) , **PT-100 2Wire or 3Wire** (-99.9°C to 400.0°C For Temperature I/P) (-999 to 9999 For Analog I/P)
OUTPUT	Output 1	RS-485 MODBUS Communication (Optional)
	Output 2	8 Relay With Grouping Facility (Optional)
	Output 3	USB Port with Data logging facility(Optional)
SPECIFICATION	Accuracy	±1% of FSD
	Supply	100-250V AC (SMPS), 50/60 Hz

USB Pendrive Compatible

Multispan Scanner Model Selection Guide

sr.no	Model	Channel	Input 1 J/k/pt-100	Input 2 4-20mA/0-20mA/0-10V DC	Output Relay	Output Rs-485	Output USB Port
1	MS-1208	8	✓				
2	MS-1208-M1	8	✓			✓	
3	MS-1208A	8		✓			
4	MS-1208A-M1	8		✓		✓	
5	MS-1248	8	✓		4		
6	MS-1248-M1	8	✓		4	✓	
7	MS-1248U	8	✓		4		✓
8	MS-1248A	8		✓	4		
9	MS-1248A-M1	8		✓	4	✓	
10	MSU-1248	8	✓	✓	4		
11	MSU-1248-M1	8	✓	✓	4	✓	
12	MSU-1248U	8	✓	✓	4		✓
13	MSU-1248U-M1	8	✓	✓	4	✓	✓
14	MS-5716	16	✓	✓			
15	MS-5716R	16	✓	✓	8		
16	MS-5716-M1	16	✓	✓		✓	
17	MS-5716U	16	✓	✓			✓
18	MS-5716R-M1	16	✓	✓	8	✓	
19	MS-5716RU	16	✓	✓	8		✓
20	MS-5716U-M1	16	✓	✓		✓	✓
21	MS-5716RU-M1	16	✓	✓	8	✓	✓

PROCESS CONTROL INSTRUMENT

FLOW RATE CUM TOTALIZER

MODEL Dimension (HxWxD) mm Panel Cutout (mm)		**MFC-1048/MFC-1048P** 96 x 96 x 52 92 x 92	**MFC-3016D/MFC-3016A** 48 x 96 x 65 46 x 92
INPUT	Inputs	4 To 20mA DC / 0 To 10V DC / Pulse (Factory set)	
	Range	0 To 99999999 For Total Flow 0 To 9999 For Flow Rate	
OUTPUT	Output 1	4-20mA DC/0-10V DC Retransmission (Factory Set) (Optional)	4-20mA DC/0-10V DC Retransmission (Factory Set) (Optional)
	Output 2	24V DC Transmitter Supply@30mA (by default)	24V DC Transmitter Supply@30mA (For Analog I/P)
	Output 3	1Relay / 2Relay 5A, 230V AC (resistive load) (1 Relay by default)	
	Output 4	RS-485 MODBUS Communication (Optional)	RS-485 MODBUS Communication (Optional)
SPECIFICATION	Accuracy	±1% of FSD	
	Supply	100-270V AC (SMPS), 50/60 Hz **or** 24V DC (Factory set)	

LOAD CELL INDICATOR / CONTROLLER

MODEL Dimension (HxWxD) mm Panel Cutout (mm)		**LD-1006** 96 x 96 x 100 92 x 92
INPUT	Input	0-20mV DC/0-30mV DC from load cell (Factory set)
	Range	0 to 9999
OUTPUT	Output	1Relay & 2Relay (1 Relay by default) 10V DC@20mA DC Load cell supply (by default) 0-10V DC /4-20mA DC Retransmission (Any One Factory Set) (Optional) RS-485 MODBUS (Optional)
SPECIFICATION	Accuracy	±1% of FSD
	Supply	230V AC ± 10% , 50Hz

PROCESS CONTROL INSTRUMENT

SIGNAL ISOLATOR & CURRENT TRANSDUCER

MODEL Dimension (HxWxD) mm Mounting	**MI-431** 100 x 12.5 x 115 Din rail mounting	**MI-532** 100 x 17.5 x 115 Din rail mounting	**MI-631/ MI-632** 76 x 27 x 85 Din rail mounting
INPUT Input	**Analog:** 0-20mA DC /4-20mA DC /0-10V DC (Factory set)		0-20mA DC /4-20mA DC / 0-10V DC / -5 To 5V DC / 0 To 300V DC / 0 To 300V AC Resistance 2Wire or 3Wire Port / Any range in mV DC (Factory Set)
Sensor			J/K/PT-100 (Factory Set)
OUTPUT	(0-20mA DC / 4-20mA DC / 0-10V DC) Single Output (Factory Set) 24V DC Trans.Supply	(0-20mA DC / 4-20mA DC / 0-10V DC) Dual Output (Factory Set) 24V DC Trans.Supply	0-20mA DC /4-20mA DC / 0-10V DC (Single or Dual Output) (Factory Set)
SPECIFICATION Accuracy	±0.5% of FSD		
Supply	100-270V AC (SMPS), 50/60 Hz/ 24V DC (Factory Set)		

MODEL Dimension (HxWxD) mm Mounting	**MI-631T/ MI-632T** 76 x 27 x 85 Din rail mounting	**MI-631P/ MI-532P** 76 x 27 x 85 Din rail mounting
INPUT Input	0-20mA DC /4-20mA DC / 0-10V DC / -5 To 5V DC / 0 To 300V DC / 0 To 300V AC Resistance 2Wire or 3Wire Port / Any range in mV DC (Factory Set)	0-20mA DC /4-20mA DC / 0-10V DC / -5 To 5V DC / 0 To 300V DC / 0 To 300V AC Resistance 2Wire or 3Wire Port / Any range in mV DC (Factory Set)
Sensor	J/K/ Type	PT-100 2Wire or 2Wire
OUTPUT	0-20mA DC /4-20mA DC / 0-10V DC (Single or Dual Output) (Factory Set)	0-20mA DC /4-20mA DC / 0-10V DC (Single or Dual Output) (Factory Set)
SPECIFICATION Accuracy	±0.5% of FSD for J Type & ±1% of FSD for K Type	±0.5% of FSD
Supply	100-270V AC (SMPS), 50/60 Hz/ 24V DC (Factory Set)	

PROCESS CONTROL INSTRUMENT

SIGNAL ISOLATOR & CURRENT TRANSDUCER

MODEL Dimension (HxWxD) mm Mounting		**CTR-63/CTR-632** 76 x 27 x 85 Din rail mounting	**VTR-63/VTR-632** 76 x 27 x 85 Din rail mounting
INPUT	Input	0 To 5A AC, 0 To 1A AC (Factory Set)	0 To 5A AC, 0 To 1A AC (Factory Set)
	Sensor	PT-100 2Wire or 3Wire	PT-100 2Wire or 3Wire
OUTPUT		(0-20mA DC /4-20mA DC / 0-10V DC) (Single or Dual Output) (Factory Set)	(0-20mA DC /4-20mA DC / 0-10V DC) (Single or Dual Output) (Factory Set)
SPECIFICATION	Accuracy	±1% of FSD	
	Supply	100-270V AC (SMPS), 50/60 Hz/ 24V DC (Factory Set)	

LOOP POWERED TRANSMITTER

MODEL Dimension (HxWxD) mm Mounting		**LPT-45** Diameter : 45 mm Head Mounting	**LPT-63** 76 x 27 x 85 Din Rail Mounting
INPUT	Input	PT-100 3Wire / J / K (Factory set)	
	Range	PT-100: 0 to 100/ 0 to 200/ 0 to 300/ 0 to 400 (Configurable) / Fix Range	Fix Range
OUTPUT		4-20mA DC Signal (2 Wire System)	
SPECIFICATION	Supply	24V DC Loop Powered	

PROCESS CONTROL INSTRUMENT

FAULT ANNUNCIATOR

Upto 10 Fault Inputs & 3 Outputs

16 X 2 LCD Display

PC INTERFACE SOFTWARE

MODEL Dimension (HxWxD) mm Panel Cutout (mm)	**FA-11** 96 x 96 x 52 92 x 92	
DISPLAY	16 Character by 2 line with GREEN back light LCD display	
INPUT Input	10 Input potential free contact	
OUTPUT	3 Relay 1C/O for audio alarm, visual alarm & Machine Trip	
SPECIFICATION Supply	100-270V AC (SMPS), 50/60 Hz	
Indication	1) Audio Alarm 2) Visual Alarm 3) Machine Output	
Features	Fault Type NO or NC Configurable Last 10 fault history saved in memory	
Note	**RS 232 Serial PC Interfacing to define Soft / Hard fault , RS-485 MODBUS is available as per request**	

DUAL PROCESS INDICATOR

MODEL Dimension (HxWxD) mm Panel Cutout (mm)	**DPI-122** 96 x 96x 54 92 x 92	**DPI-1824** 96 x 96x 54 92 x 92
INPUT Input 1 & 2	PT-100 3Wire / 4-20mA DC / 0-20mA DC / 0-10V DC (Any two factory set)	J / K / PT-100 2Wire or 3Wire 0-10V DC / 4-20mA DC / 0-20mA DC (Configurable).
RANGE	-999 to 9999 For Analog I/P, **PT-100** (0.0°C - 400.0°C)	(-999 To 9999 for Analog Input) **J** (0°C to 600°C), **K** (0°C to 1200°C), **PT-100 2Wire or 3Wire** (-99°C TO 400°C, -99.9°C TO 400.0°C) For Temperature Sensor
OUTPUT Output	1 Relay / 2 Relay (Optional) 24V DC Transmitter Supply@30mA (Optional) RS-485 Modbus (Optional)	4 Relay + 2 Retransmission + 24V DC Transmitter @30mA DC
SPECIFICATION Control Action	ON-OFF	
Accuracy	±1% of FSD	
Supply	100-270V AC (SMPS), 50/60 Hz	

PROCESS CONTROL INSTRUMENT

PROCESS INDICATORS

MODEL	PI-38	PI-54	PI-41	UPI-38
Dimension (HxWxD) mm	48 x 96 x 26	38 x 62 x 65	48 x 48 x 46	48 x 96 x 65
Panel Cutout (mm)	46 x 92	31 x 54	45 x 45	46 x 92
INPUT — Inputs	0-10V DC / 0-20mA DC / 4-20mA DC (Configurable)			J / K / PT-100 2Wire or 3Wire , 0-10V / 4-20mA / 0-20mA DC (Configurable)
Range	**J** (0°C to 600°C), **K** (0°C to 1200°C), **PT-100 2Wire or 3Wire** (-99°C TO 400°C, -99.9°C TO 400.0°C) For Temperature Sensor, (-999 To 9999 for Analog Input)			
RESOLUTION — Display Resolution	0.000/00.00/000.0/0000 (Configurable, for Analog Input)			
FEATURES — Feature	Correction Factor, Offset, Filtration Rate, Reverse Scaling			
Supply	100-270V AC (SMPS), 50/60 Hz			

PROCESS CONTROLLER

MODEL	PIC-1101	PIC-38	PIC-4202
Dimension (HxWxD) mm	96 x 96 x 54	48 x 96 x 65	48 x 48 x 95
Panel Cutout (mm)	92 x 92	46 x 92	45 x 45
INPUT — Inputs	0 To 10V DC/ 4 To 20mA DC/ 0 To 20mA DC (Configurable)		
Range	-999 To 9999 (Configurable)		
OUTPUT — Output 1	1 Relay (By default)		2 Relay (By default)
Output 2	2 Relay (Optional)		
Output 3	24V DC Transmitter Supply@30mA (By default)		24V DC Transmitter Supply @30mA
Output 4	4-20mA / 0-20mA DC Retransmission Output (Factory Set)(Optional)		NA
SPECIFICATION — Operating Mode	High / Low / Inband / Outband / Absolute Low / Absolute Outband Alarm (Configurable)		
Accuracy	±1% of FSD		
Supply	100-270V AC (SMPS), 50/60 Hz		

PID TEMPERATURE CONTROLLER BUILT IN AMPERE INDICATION

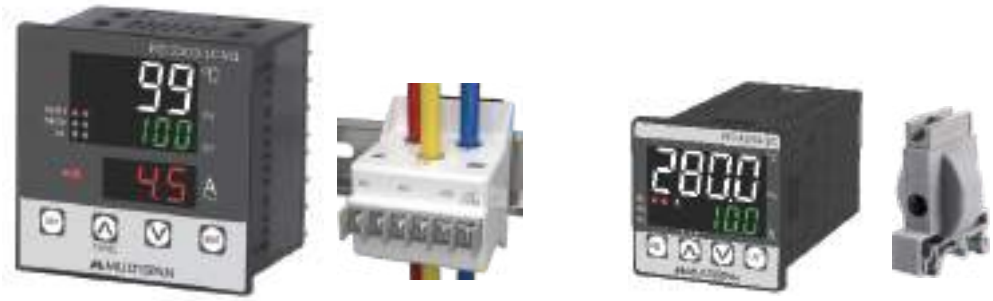

MODEL Dimension (HxWxD) mm Panel Cutout (mm)	PID 2303-1C/3C (With CT Module) 72 x 72 x 85 68 x 68	PID-4203-1C (With CT Module) 48 x 48 x 95 45 x 45
INPUT Input	J / K (Configurable) + CT Input	J / K / PT-100 (Configurable)
Range	**J** (0°C to 400°C), **K** (0°C to 500°C)	**J** (0°C to 600°C), **K** (0°C to 1200°C) **PT-100 2Wire or 3Wire** (-99°C to 400°C,-99.9°C to 400.0°C)
CT INPUT	1 CT (30A or 60A Rail Mounting) 3 CT (30A or 60A Rail Mounting)	1 CT (30A or 60A Rail Mounting)
OUTPUT	3 Relay 1C/O 5A,230V AC (resistive load) or SSR Drive O/P 12V DC, 20mA (Factory Set)(3 Set point)	3 Relay 1C/O 5A,230V AC (resistive load) or 3 SSR Drive O/P 12V DC,20mA (Factory Set)(3 Set point) **(Heat + Cool + Alarm)**
SPECIFICATION Control Action Accuracy Supply	PID / ON-OFF (Configurable) ±1% of FSD 100-250V AC (SMPS), 50/60 Hz	PID / ON-OFF (Configurable) ±1% of FSD 100-250V AC (SMPS), 50/60 Hz
Note	**RS-485 Output available in PID 2303-1C/3C**	

MOTOR SYNCHRONIZER

MODEL Dimension (HxWxD) mm Mounting	SN-126 75 x 45 x 110 Din Rail Mounting
INPUT	3Wire /POT Resistance
OUTPUT	1Relay for zeroing facility 0-10V DC(4 /5 / 6 Channel)
SPECIFICATION Supply	230V AC, ± 10% 50Hz

TEMPERATURE

UNIVERSAL PROGRAMMABLE CONTROLLER

Auto Tune PID, RS-485 MODBUS Facility

Coming soon

MODEL Dimension (HxWxD) mm Panel Cutout (mm)		**PTC L12A-M1** 96 x 96 x 52 92 x 92	**PTC-382A-M1** 48 x 96 x 65 46 x 92	**UTC-4201A** 48 x 48 x 95 45 x 45
INPUT	Input	J / K / PT-100 2Wire or 3Wire , 0-10V / 4-20mA / 0-20mA (Configurable).		J / K / PT-100 2Wire or 3Wire
	Range	**J** (0°C to 600°C), **K** (0°C to 1200°C), **PT-100 2Wire or 3Wire** (-99°C TO 400°C, -99.9°C TO 400.0°C) For Temperature Sensor, (-999 To 9999 for Analog Input)		**J** (0°C to 600°C), **K** (0°C to 1200°C), **PT-100** (-99°C TO 400°C, -99.9°C TO 400.0°C)
OUTPUT	Output 1	1Relay 1C/O 5A,230V AC (resistive load) or SSR Drive O/P 12V DC,20mA (Factory Set)		0-10V DC/4-20mA DC (Factory Set)
	Output 2	1Relay 1C/O 5A,230V AC (resistive load) or SSR Drive O/P 12V DC, 20mA (Factory Set)		
	Output 3	0-10V DC/4-20mA DC (Factory Set) (Controlling/Retransmission Selection)		
	PC Communication	RS-485 MODBUS Communication (Optional)		
SPECIFICATION	Control Action	PID / ON-OFF (Configurable)		
	Accuracy	±1% of FSD		
	Supply	100-250V AC (SMPS), 50/60 Hz		

Coming soon

MODEL Dimension (HxWxD) mm Panel Cutout (mm)		**PTC 1202A-M1** 96 x 96 x 54 92 x 92	**PTC-2202A-M1** 72 x 72 x 45 68 x 68	**PTC-4202A-M1** 48 x 48 x 95 45 x 45
INPUT	Input	J / K / PT-100 2Wire or 3Wire , 0-10V / 4-20mA / 0-20mA (Configurable).		
	Range	**J** (0°C to 600°C), **K** (0°C to 1200°C), **PT-100 2Wire or 3Wire** (-99°C TO 400°C, -99.9°C TO 400.0°C) For Temperature Sensor, (-999 To 9999 for Analog Input)		
OUTPUT	Output 1	1Relay 1C/O 5A,230V AC (resistive load) or SSR Drive O/P 12V DC,20mA (Factory Set)		
	Output 2	1Relay 1C/O 5A,230V AC (resistive load) or SSR Drive O/P 12V DC, 20mA (Factory Set)		
	Output 3	0-10V DC/4-20mA DC (Factory Set) (Controlling/Retransmission Selection)		
	PC Communication	RS-485 MODBUS Communication (Optional)		
SPECIFICATION	Control Action	PID / ON-OFF (Configurable)		
	Accuracy	±1% of FSD		
	Supply	100-250V AC (SMPS), 50/60 Hz		

PTC MODEL SELECTION GUIDE

No	Product Model	Display	Size (H x W x D)mm	Output 1	Output 2	Output 3	Output RS-485
1	PTC-L12	Graphical LCD	96 x 96 x 54	Relay	Relay	-	-
2	PTC-L12A	Graphical LCD	96 x 96 x 54	4-20mA/ 0-10V DC	Relay	Relay	-
3	PTC-L12-M1	Graphical LCD	96 x 96 x 54	Relay	Relay	-	✓
4	PTC-L12A-M1	Graphical LCD	96 x 96 x 54	4-20mA/ 0-10V DC	Relay	Relay	✓
5	PTC-1202	LED	96 x 96 x 54	Relay	Relay	-	-
6	PTC-1202A	LED	96 x 96 x 54	4-20mA/ 0-10V DC	Relay	Relay	
7	PTC-1202-M1	LED	96 x 96 x 54	Relay	Relay	-	✓
8	PTC-1202A-M1	LED	96 x 96 x 54	4-20mA/ 0-10V DC	Relay	Relay	✓
9	PTC-4202	LED	48 x 48 x 95	Relay	Relay	-	-
10	PTC-4202A	LED	48 x 48 x 95	4-20mA/ 0-10V DC	Relay	Relay	-
11	PTC-4201-M1	LED	48 x 48 x 95	Relay	-	-	✓
12	PTC-4202-M1	LED	48 x 48 x 95	Relay	Relay	-	✓
13	PTC-4202A-M1	LED	48 x 48 x 95	4-20mA/ 0-10V DC	Relay	Relay	✓

Note : In Analog output 0-10V DC or 4-20mA DC any one fixed, to confirm while order placed.

TEMPERATURE

HUMIDITY + TEMPERATURE CONTROLLER

MODEL Dimension (HxWxD) mm Panel Cutout (mm)		**MHC-1101 (Humidity Controller)** 96 x 96 x 54 92 x 92	**MHT-1202 (Humidity + Temp. Controller)** 96 x 96 x 54 92 x 92
INPUT	Input	Humidity Sensor	S-1: PT-100 2Wire or 3Wire (RTD) S-2: Humidity Sensor
	Range	0.0 to 100.0%	**PT-100 2Wire or 3Wire** (-50°C to 199.9°C) **Humidity Sensor (0.0 to 100.0%)**
OUTPUT		1Relay 1C/O, 5A @230V AC (Resistive Load)	1st Relay for Temperature and 2nd Relay for Humidity. RS-485 Modbus (Optional)
SPECIFICATION	Control Action	ON-OFF	ON-OFF
	Accuracy	±1% of FSD	±1% of FSD
	Supply	100-270V AC (SMPS), 50/60 Hz	100-270V AC (SMPS), 50/60 Hz
	Note	**RS-485 Modbus Available on Request MHT-1202**	

TEMPERATURE

9 STAGE PROFILE CONTROLLER

MODEL Dimension (HxWxD) mm Panel Cutout (mm)		**PRC-1202 (Profile Controller)** 96 x 96 x 100 92 x 92
INPUT	Input	J/ K/ PT-100 2Wire or 3Wire (Factory Set)
	Range	**J** (0°C to 600°C),**K** (0°C to 1200°C), **PT-100 2Wire or 3Wire** (-99°C to 400°C, 0.0°C to 400.0°C)
OUTPUT		2 Relay 1C/O (9 set point), 2nd Relay for Alarm.
SPECIFICATION	Control Action	ON-OFF
	Accuracy	±1% of FSD
	Supply	100-270V AC (SMPS), 50/60 Hz

TEMPERATURE CONTROLLER - UNIVERSAL

Double Display PID Controller - 3 Relay

MODEL Dimension (HxWxD) mm Panel Cutout (mm)		**UTC-4203** 48 x 48 x 95 45 x 45	**UTC-3203** 96 x 48 x 85 92 x 45
INPUT	Input	J / K / PT-100 2Wire or 3Wire (Configurable)	
	Range	**J** (0°C to 600°C), **K** (0°C to 1200°C) **PT-100 2Wire or 3Wire** (-99°C to 400°C,-99.9°C to 400.0°C)	
OUTPUT		3 Relay 1C/O 5A, 230V AC (resistive load) or 3 SSR Drive O/P 12V DC, 20mA (3 Set point)	
SPECIFICATION	Control Action	PID / TP / ON-OFF (Configurable)	
	Accuracy	±1% of FSD	
	Supply	100-270V AC (SMPS), 50/60 Hz	

TEMPERATURE CONTROLLERS

Single Display, PID - Economy Range

MODEL Dimension (HxWxD) mm Panel Cutout (mm)		**UTC-114** 96 x 96 x 43 92 x 92	**UTC-214** 72 x 72 x 45 68 x 68	**UTC-413P** 48 x 48 x 70 45 x 45
INPUT	Input	J/ K/ PT-100 2Wire or 3Wire (Configurable)		
	Range	**J** (0°C to 400°C or 0°C to 600°C), **PT-100 2Wire or 3Wire** (-99°C to 400°C) **K** (0°C to 1200°C),		**J** (0°C to 600°C), **K** (0°C to 999°C), **PT-100** (-50.0°C to 200.0°C)
OUTPUT		1Relay 1C/O 5A,230V AC(resistive load) & SSR Drive O/P 12V DC, 30mA (Parallel to Relay) (1 Set point)		
SPECIFICATION	Control Action	PID / ON-OFF (Configurable)		
	Accuracy	±1% of FSD		
	Supply	100-270V AC (SMPS), 50/60 Hz		

TEMPERATURE

TEMPERATURE CONTROLLERS

Dual Output PID Controller - FULL FEATURED

MODEL Dimension (HxWxD) mm Panel Cutout (mm)	UTC-1202G 96 x 96 x 54 92 x 92	UTC-2202G 72 x 72 x 85 68 x 68	UTC-4202G 48 x 48 x 95 45 x 45	UTC-3202 96 x 48 x 85 92 x 45
INPUT Input	J / K /PT-100 2Wire or 3Wire (Configurable)			J / K / PT-100 2Wire or 3Wire (Confi.)
Range	**J** (0°C to 600°C, 0.0 to 400.0), **K** (0°C to 1200°C, 0.0 to 500.0°C) **PT-100 2Wire or 3Wire** (-50°C to 400°C, -50.0°C to 400.0°C)			
OUTPUT	2 Output : (SSR parallel to 1st Relay) + 1Relay or 1SSR Drive O/P (2 Relay 1C/O 5A,230V AC (resistive load) & SSR Drive O/P 12V DC, 20mA)			
SPECIFICATION Operating Mode	Heat / Cool / Alarm			
Alarm	High / Inband / Absolute Low / Absolute Outband / Outband / End Alarm/ Low Alarm Outband + **Soak Timer**			
Control Action	PID / TP / ON-OFF (Configurable)			
Accuracy	±0.5% of FSD			
Supply	100-270V AC (SMPS), 50/60 Hz			

TEMPERATURE CONTROLLER

Double Display, Autotune PID

MODEL Dimension (HxWxD) mm Panel Cutout (mm)	UTC-121G 96 x 96 x 54 92 x 92	UTC-221G 72 x 72 x 85 68 x 68	UTC-421G 48 x 48 x 95 45 x 45	UTC-321P 96 x 48 x 85 92 x 45
INPUT Input	J / K /PT-100 2Wire or 3Wire (Configurable)			
Range	**J** (0°C to 600°C, 0.0 to 400.0), **K** (0°C to 1200°C, 0.0 to 500.0°C) **PT-100 2Wire or 3Wire** (-50°C to 400°C, -50.0°C to 400.0°C)			
OUTPUT	1Relay 1C/O 5A,230V AC(resistive load) & SSR Drive O/P 12V DC, 20mA (Parallel to Relay) (1 Set point)			
SPECIFICATION Control Action	PID / ON-OFF (Configurable)			
Accuracy	±0.5% of FSD			
Supply	100-270V AC (SMPS), 50/60 Hz			

TEMPERATURE CONTROLLER
Single Output PID Controller

MODEL	**UTC-121P**	**UTC-221P**	**UTC-421P**
Dimension (HxWxD) mm	96 x 96 x 43	72 x 72 x 45	48 x 48 x 70
Panel Cutout (mm)	92 x 92	68 x 68	45 x 45
INPUT Input	J/ K/ PT-100 2Wire or 3Wire (Configurable)		
Range	**J** (0°C to 600°C), **K** (0°C to 999°C), **PT-100 2Wire or 3Wire** (-99°C to 400°C) (-19.9 to 99.9)		
OUTPUT	1Relay 1C/O 5A,230V AC (resistive load) & SSR Drive O/P 12V DC,30mA (Parallel to Relay) (1 Set point)		
SPECIFICATION Control Action	PID / TP/ ON-OFF (Configurable)		
Accuracy	±1% of FSD		
Supply	100-270V AC (SMPS), 50/60 Hz		

MODEL	**TC-421P**	**TC-442**	**TC-443**
Dimension (HxWxD) mm	48 x 48 x 70	48 x 48 x 70	48 x 48 x 70
Panel Cutout (mm)	45 x 45	45 x 45	45 x 45
INPUT Input	J/K Type		
Range	**J** (0°C to 600°C), **K** (0°C to 900°C)		
OUTPUT	1Relay 1C/O 5A,230V AC (resistive load) & SSR 12V DC,30mA DC (Parallel to Relay) (1 Set point)	2 Output : (SSR parallel to 1st Relay) + 1Relay (2Relay 1C/O 5A,230V AC (resistive load) & SSR Drive O/P 12V DC, 20mA)	3 Output : (SSR parallel to 1st Relay) + 2 Relay (3 Relay 1C/O 5A,230V AC (resistive load) & SSR Drive O/P 12V DC,20mA)
SPECIFICATION Control Action	PID / ON-OFF (Configurable)		
Accuracy	±1% of FSD		
Supply	100-270V AC (SMPS), 50/60 Hz		

TEMPERATURE

DIGITAL TEMPERATURE CONTROLLERS
(Fixed Input)

MODEL	**TC-19**	**TC-29**	**TC-49**
Dimension (HxWxD) mm	96 x 96 x 43	72 x 72 x 45	48 x 48 x 70
Panel Cutout (mm)	92 x 92	68 x 68	45 x 45
INPUT Input	J/ K/ R/ S / PT-100 2Wire or 3Wire (Factory Set)		J/ K (Configurable) or PT-100 2Wire or 3Wire (Factory Set)
Range	**J** (0°C to 400°C or 0°C to 600°C), **K** (0°C to 1200°C), **PT-100 2Wire or 3Wire** (0°C to 400°C, -50.0°C to 200.0°C)		**J** (0°C to 600°C), **K** (0°C to 999°C), **PT-100** (-50.0°C to 200.0°C)
OUTPUT	1Relay 1C/O 5A, 230V AC (resistive load) or SSR (Factory set)	1Relay 1C/O 5A, 230V AC (resistive load) & SSR Drive O/P 12V DC, 20mA (Parallel to Relay)	
SPECIFICATION Control Action	TP / ON-OFF (Factory Set)	TP/ ON-OFF (Configurable)	
Accuracy	±1% of FSD	±1% of FSD	
Supply	230V AC ± 10%, 50Hz	100-270V AC (SMPS), 50/60 Hz	

PID TEMPERATURE CONTROLLER
Economy Range

MODEL	**TC-29P**	**TC-221P**	**TC-49P**
Dimension (HxWxD) mm	72 x 72 x 45	72 x 72 x 45	48 x 48 x 70
Panel Cutout (mm)	68 x 68	68 x 68	45 x 45
INPUT Input	J/ K/ PT-100 2Wire or 3Wire (Factory Set)	J Type	J/ K (Configurable) **or** PT-100 2Wire or 3Wire (Factory Set)
Range	**J** (0°C to 400°C or 0°C to 600°C), **K** (0°C to 1200°C), **PT-100 2Wire or 3Wire** (0°C to 400°C, -50.0°C to 200.0°C)	**J** (0°C to 600°C)	**J** (0°C to 600°C), **K** (0°C to 999°C), **PT-100** (-50.0°C to 200.0°C)
OUTPUT	1Relay 1C/O 5A,230V AC (resistive load) & SSR Drive O/P 12V DC,20mA (Parallel to Relay) (1 Set point)		
SPECIFICATION Control Action	PID/ ON-OFF (Configurable)		
Accuracy	±1% of FSD		
Supply	100-270V AC (SMPS), 50/60 Hz		

DINRAIL MOUNT

Master Module

Slave Modules

MODEL Dimension (HxWxD) mm Panel Cutout (mm)	DTC-1X (Master Module) 76 x 27 x 116 Din Rail Mounting	DTC-1A (Slave Module) 76 x 27 x 116 Din Rail Mounting
INPUT — Input	J / K / PT-100 (Configurable).	
Range	**J** (0°C to 600°C), **K** (0°C to 1200°C), **PT-100** (-99°C TO 400°C),(-99.0°C TO 400.0°C)	
OUTPUT	2 Relay 1C/O, 230V AC, 5A or SSR Drive O/P 12V DC, 20mA (Factory Set)	
Communication	RS-485 MODBUS Communication	
SPECIFICATION — Control Action	PID / TP / ON-OFF (Configurable)	
Accuracy	±1% of FSD	
Supply	24V DC (For Master Module)	

Features

MODBUS RS-485 communication for HMI Indication

Connection upto 1 Master + 7 Slave modules.

Note :

For more than 8 modules, master module can be repeated with 7 slaves

A brand by MULTISPAN

NEW LAUNCH

MODEL Dimension (HxWxD) mm Panel Cutout (mm)	**CC-5010** 40 x 80 x 67 30 x 71	**CC-5020** 40 x 80 x 67 30 x 71	**CC-5052** 40 x 80 x 67 30 x 71
INPUT Input	NTC (Thermistor)		
Range	(-40°C to 90.0°C)		
OUTPUT	1Relay 1C/O **10A**, 230V AC (Resistive Load) (With Defrost Facility)	1Relay 1C/O **20A**, 230V AC (Resistive Load) (With Defrost Facility)	2 Relays for Compressor
SPECIFICATION Control Action	ON-OFF (Cooling Mode)		
Supply	230V AC ± 10%, 50Hz / 24V DC / 12V DC (Factory set)		

NEW LAUNCH

NEW LAUNCH

MODEL Dimension (HxWxD) mm Panel Cutout (mm)	**CC-5012/15** 40 x 80 x 67 30 x 71	**CC-5022/25** 40 x 80 x 67 30 x 71
INPUT Input	NTC (Thermistor)	
Range	(-40°C to 90.0°C)	(-50°C to 99.9°C)
OUTPUT	1st Relay for Compressor (10 Amp) 2nd Relay for Alarm	1st Relay for Compressor (20 Amp) 2nd Relay for Alarm
SPECIFICATION Control Action	ON-OFF (Cooling Mode)	
Supply	230V AC ± 10%, 50Hz / 24V DC / 12V DC (Factory set)	

Note: Buzzer is available as a second output in CC-5015/25.

A brand by MULTISPAN

MODEL Dimension (HxWxD) mm Panel Cutout (mm)		**CC-5021** 40 x 80 x 67 30 x 71	**CC-5048** 40 x 80 x 67 30 x 71
INPUT	Input	NTC (Thermistor)	NTC (Thermistor) + Door sensor
	Range	(-40°C to 90.0°C)	
OUTPUT		1st Relay for Compressor 2nd Relay for Defrost heater	1st Relays for Compressor (20 Amp) 2nd Relay for Alarm
SPECIFICATION	Control Action	ON-OFF (Cooling Mode)	
	Supply	230V AC ± 10%, 50Hz / 24V DC / 12V DC (Factory set)	

All Cryo models also available in Touch pad Facility.

HUMIDITY CONTROLLER

MODEL Dimension (HxWxD) mm Panel Cutout (mm)		**MHC-5012 (Humidity Controller)** 40 x 80 x 67 30 x 71
INPUT	Input	Humidity Sensor
	Range	0.0 to 100.0%
OUTPUT		2 Relay 1C/O, 5A @230V AC (Resistive Load)
SPECIFICATION	Control Action	ON-OFF
	Accuracy	±1% of FSD
	Supply	230V AC ± 10%, 50Hz / 24V DC / 12V DC (Factory set)

TIMER

UP TO 12 CHANNEL SEQUENTIAL TIMER

With Cascading Facility For 8 + 8 Outputs

4,8 and 12 Channel Sequential Timer

MODEL Dimension (HxWxD) mm Panel Cutout (mm)	**SQT-1044/SQT-1244 (Sequential Timer)** 96 x 96 x 52 92 x 92	**CMT-1044 (Combination Timer)** 96 x 96 x 52 92 x 92	**SQT-1022 (Sequential Timer)** 96 x 96 x 52 92 x 92
RANGE Range	99.99 Sec / 999.9 Sec / 99.59 Min / 999.9 Min / 99.59 Hrs / 999.9 Hrs (Configurable)		
OUTPUT	8Relay/12Relay 1C/O 5A,230V AC (resistive load) or SSR Drive O/P 12V DC, 20mA Output (Any one factory set)		4Relay 1C/O 5A,230V AC (resistive load) or SSR 12V DC, 20mA Output (Any one factory set)
SPECIFICATION			
Operating Mode	Delayed ON / Delayed OFF / Cycle Mode (Configurable)		
Count Direction	Up / Down (Configurable)		
Memory	Yes / No (Configurable)		
Reset	Front & Back Both Reset Available		
Supply	100-270V AC (SMPS), 50/60 Hz		
NOTE	**Cascading facility available in SQT-1044 (8 Relay) Sequential timer up to 1 + 3 parallel** **SSR output is available on request** **Cascading facility available on request in SQT-1022 Sequential Timer**		

MODEL Dimension (HxWxD) mm Panel Cutout (mm)	**RTC-1048 (Real Time Clock Timer)** 96 x 96 x 52 92 x 92
RANGE Range	23:59:59 Hrs / Min / Sec
OUTPUT	1Relay 1C/O
SPECIFICATION	
Parameters	ON Time / OFF Time (16 Program)
Supply	100-270V AC (SMPS), 50/60 Hz

PROGRAMMABLE TIMER
Universal Range - 1Relay Output

MODEL	UTR-1033	UTR-2033	UTR-433	UTR-413
Dimension (HxWxD) mm	96 x 96 x 54	72 x 72 x 45	48 x 48 x 70	48 x 48 x 70
Panel Cutout (mm)	92 x 92	68 x 68	45 x 45	45 x 45
INPUT Start Pulse	Micro Switch / Limit Switch / Proximity (Configurable)			
Range	999 / 99.9 / 9.99 Sec/Min/Hrs (Configurable)			
OUTPUT	1Relay 2C/O 5A, 230V AC(resistive load)			
SPECIFICATION				
Programm	Delayed ON / Delayed OFF / Cycle Mode (Configurable)			
Count Direction	Up / Down (Configurable)			
Memory	Yes / No (Configurable)			
Reset	Front & Back Both Reset Available			
Supply	100-270V AC (SMPS), 50/60 Hz			

PROGRAMMABLE TIMER
UNIVERSAL TIMER - 2Relay output

MODEL	UTR-1244	UTR-2244	UTR-4244	CTU-4244
Dimension (HxWxD) mm	96 x 96 x 54	72 x 72 x 45	48 x 48 x 70	48 x 48 x 70
Panel Cutout (mm)	92 x 92	68 x 68	45 x 45	45 x 45
INPUT Start Pulse	Micro Switch / Limit Switch / Proximity (Configurable)			
Range	9999 / 999.9 / 99.99 Sec / Min / Hrs (Configurable)			
OUTPUT	2Relay 1C/O 5A, 230V AC (resistive load)			
SPECIFICATION				
Programm	Forward - Reverse Mode / Cyclic Mode / Sequential Mode / Combination Mode (Configurable)			
Count Direction	Up / Down (Configurable)			
Memory	Yes / No (Configurable)			
Reset	Front & Back Both Reset Available			
Supply	100-270V AC (SMPS), 50/60 Hz			

TIMER

PROGRAMMABLE TIMER

Time Totalizer

MODEL Dimension (HxWxD) mm Panel Cutout (mm)	DTT-1000 96 x 96 x 43 92 x 92	DTT-2000 72 x 72 x 60 68 X 68	DTT-5000 36 x 72 x 95 32 x 68	DTT-3000 48 x 96 x 26 46 x 92	DTT-56G 38 x 62 x 65 31 x 54
RANGE Range	1) 9999.59 hr/min. 2) 9999.59 min/sec 3) 99999.9 sec 4) 999999 sec 5) 9999.99 sec 6) 99999.9 min 7) 999999 min 99999.9 hr 9) 999999 hr (Configurable)				
INPUT Input	Micro Switch/ Limit Switch / Proximity Switch / 230V AC (Factory Set)				
SPECIFICATION Supply	230V AC ± 10%, 50Hz				

DIGITAL PRESETABLE TIMER

Multi Range- Thumbwheel Setting

MODEL Dimension (HxWxD) mm Panel Cutout (mm)	MDT-1310F 96 x 96 x 52 92 x 92	MDT-2312F 72 x 72 x 45 68 x 68	MDT-4310N 48 x 48 x 70 45 x 45	DIN-63 76 x 28 x 85 DIN rail mounting	DIN-63C 76 x 28 x 85 DIN rail mounting
RANGE Range	999 , 99.9, 9.99 Hour / Min / Sec (Configurable)				
OUTPUT Output	1Relay 2C/O 5A,230V AC (resistive load)		1Relay 1C/O 5A, 230V AC (res. load)	1Relay 2C/O 5A,230V AC (resistive load)	
SPECIFICATION Operation Mode	Delayed ON / Delayed OFF (Configurable)				Cycle ON / Cycle OFF
Counting Direction	UP / DOWN (Configurable)				
Memory	YES / NO (Configurable)				YES/NO (Configurable)
Supply	230V AC ± 10%, 50Hz		100-270V AC/DC (SMPS), 50/60 Hz		

NEW LAUNCH

MODEL		**PFLC-68**
Dimension (HxWxD) mm		96 X 96 X 54
Panel Cutout (mm)		92 x 92
INPUT	Input 1	2 NPN Proximity Switch (Factory Set)
	Input 2	Color Mark Sensor (NPN/PNP Selection)
OUTPUT	Output 1	Clutch & Brake
	Output 2	H-Sealer Relay
	Output 3	V-Sealer Relay
	Output 4	Nitrogen Filling Relay
	Output 5	Batch Cutter Relay
	Output 6	Batch Coding Relay
	Output 7	Auger Relay
	Output 8	Unwinding Relay
SPECIFICATION	Memory	Non-Volatile Memory
	Reset	Manual Reset
	Supply	24V DC

Touch Screen

MODEL		**MPC-1065**
Dimension (HxWxD) mm		96 X 96 X 52
Panel Cutout (mm)		92 x 92
INPUT	Input 1	2 NPN/PNP Proximity Switch (Factory Set)
	Input 2	Color Mark Sensor (NPN/PNP Selection)
OUTPUT	Output 1	Clutch & Brake
	Output 2	H-Sealer Relay
	Output 3	Nitrogen Filling Relay
	Output 4	Batch Cutter Relay
	Output 5	Unwinding Relay
SPECIFICATION	Memory	Non-Volatile Memory
	Reset	Manual Reset
	Supply	24V DC

COUNTER

PHOTO ELECTRIC CONTROLLERS

		VIBRATOR CONTROLLER	VIBRATOR CONTROLLER
MODEL Dimension (HxWxD) mm Panel Cutout (mm)	**MPC-1061L / MPC-1062L** 96 x 96 x 52 92 x 92	**MVC-72N** 72 x 72 x 45 68 x 68	**MVC-7210** 72 x 72 x 85 68 x 68
DISPLAY	16 Character by 2 line with GREEN back light LCD display		
INPUT Input 1 Input 2	1 or 2 NPN Proximity switch (Factory set) Color Mark Sensor	NPN/PNP Proximity Switch	NPN/PNP Proximity Switch
OUTPUT	2 Output (Forward & Reverse Winding), 2A, 110V AC / 230V AC+ Buzzer Output	0-110V AC Corresponding to percentage input.	0-110V AC Corresponding to percentage input.
SPECIFICATION Memory Reset	Non-Volatile Memory Manual Reset		
Supply	For MPC-1061: 110V AC, +10%, 50Hz For MPC-1062: 230V AC, +10%, 50Hz	230V AC ± 10%, 50Hz	230V AC ± 10%, 50Hz
Note		**Vibrator load should not be more than 5Amps** **Range : 1 to 99 %**	**Vibrator load should not be more than 10Amps** **Range : 1 to 99 %**

CLUTCH BRAKE CONTROLLER

For Packaging Machine Application

16 X 2 LCD Display

MODEL Dimension (HxWxD) mm Panel Cutout (mm)	**MC-1003** 96 x 96 x 52 92 x 92	**MMC-1046T** 96 x 96 x 54 92 x 92
INPUT Input 1 Input 2 Input 3	NPN Proxy for clutch NPN Color mark sensor (CMS) Micro Switch	
RANGE Range	Clutch ON Time : 0-99.99 Sec. : 0-99.99 Sec.	0-99.99 Sec
OUTPUT Output 1 Output 2 Output 3	For Clutch For Inching For Batch Counter	For Clutch
SPECIFICATION Reset Memory Supply	Front Reset Non-Volatile Memory 100-270V AC (SMPS), 50/60 Hz	

COUNTER

COLOR MARK SENSOR
for Packaging Machine & Printing Industries

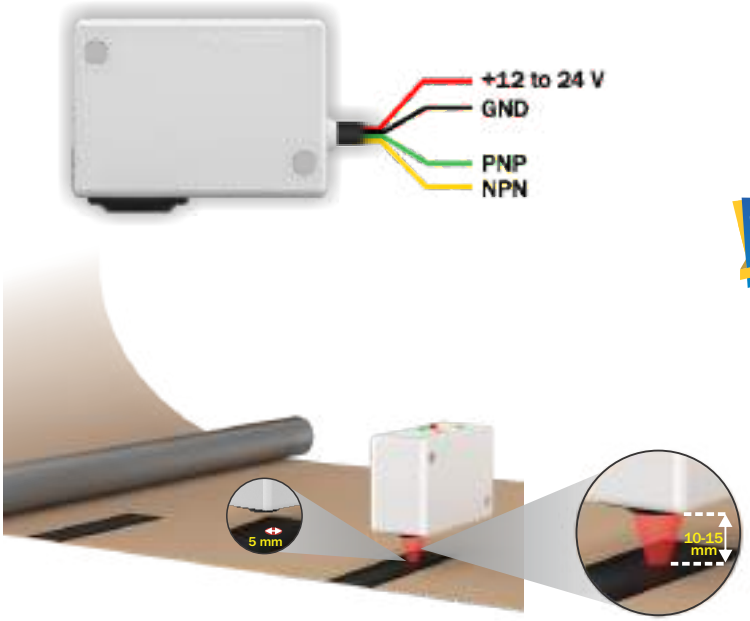

CMS-5X

Model	CMS-5X
Power Supply	12-24V DC
Current Consumption	35mA max.@ 24V DC
Output	NPN/PNP Output
Output Current	25mA max
Response Time	2 Millisecond
Indications	LED 1: Mark LED (Green) LED 2: Output LED (Red) LED 3: Background LED (Yellow)
Push Buttons	Button 1: Mark Button Button 2: Background Button
Minimum Mark Output Delay	20ms
Operating Temperature	-10 to 50C
Storage Temperature	-20 to 70C
Operating Distance	10 mm - 15mm
Minimum Spot Diameter	5 mm
Emission type	RED (630 nm) GREEN (520 nm) BLUE (465 nm)
Ambient Light Rejection	Yes
Vibration	0.5 mm Amplitude, 10 to 55 Hz Frequency
Housing Material	ABS
Lens Material	Glass
Connection	Shielded 4 Wire Cable

COUNTER

DIGITAL BATCH COUNTER

MODEL	BC-1046D	BC-2046	BC-445
Dimension (HxWxD) mm	96 x 96 x 43	72 x 72 x 50	48 x 48 x 95
Panel Cutout (mm)	92 x 92	68 x 68	45 x 45
INPUT Input	NPN/ PNP Proximity Switch / Micro Switch (Configurable) / 230V AC Pulse (Factory Set)		NPN/ PNP Proximity Switch / Micro Switch / 230V AC Pulse (Factory Set)
RANGE Range	Upper display range (0 -999999 Count) Lower display range (0 -9999)		Upper display range (0 -99999 Count) Lower display range (0 -9999)
OUTPUT	1Relay+Buzzer		
SPECIFICATION Memory	Non-Volatile Memory		
Reset	Auto reset / Manual reset / Back reset		
Supply	230V AC ± 10%, 50Hz		100-270V AC (SMPS), 50/60 Hz

DIGITAL LENGTH COUNTER

With Proximity /Single & Dual Channel Encoder Input

MODEL	LC-1046D	LC-2046	LC-3006	LC-445
Dimension (HxWxD) mm	96 x 96 x 43	72 x 72 x 50	48 x 96 x 110	48 x 48 x 95
Panel Cutout (mm)	92 x 92	68 x 68	46 x 92	45 x 45
INPUT Input	NPN/PNP Proximity Switch (Configurable) / Encoder (Factory set)			
RANGE Range	0-99999.9 / 0-999999 / 0-9999.99 / 0-999.999 Meter (Configurable)			0-9999.9 / 0-99999 / 0-999.99 Meter (Configurable)
OUTPUT	1Relay 1C/O 5A@230V AC (resistive load)			
SPECIFICATION MPM Range	999.9 MPM			
Diameter	0-9999.99 MM			
Memory	Non-Volatile Memory			
Reset	Auto Reset / Manual reset facility & front and back reset			
Supply	230V AC ± 10%, 50Hz			100-270V AC (SMPS), 50/60 Hz
Note	**In LC-445 if back reset option is required , then Input would be Proximity Sensor (NPN OR PNP) (Factory Set) RS-485 MODBUS Communication is available as per request in 96 X 96 Size (LC-1048-M1)**			

DIGITAL PROGRAMMABLE COUNTER

MODEL	PC-1044	PC-2044	PC-3006	PC-444	PC-1006D	PC-2006
Dimension (HxWxD) mm	96 x 96 x 54	72 x 72 x 45	48 x 96 x 120	48 x 48 x 70	96 x 96 x 43	72 x 72 x 60
Panel Cutout (mm)	92 x 92	68 x 68	46 x 92	45 x 45	92 x 92	68 x 68
INPUT Input	NPN/PNP Proximity Switch / Micro Switch (Configurable) / 230V AC Pulse / Encoder (Factory Set)					
Range	0 - 9999 / 0 - 999.9 Count				0 - 999999 Count	
OUTPUT	1Relay 1C/O 5A, 230V AC (resistive load)					
SPECIFICATION Count Direction	Up / Down (Configurable)					
Memory	Yes / No (Configurable)					
Reset	Auto Reset / Manual Reset / Reset at back					
Supply	230V AC ± 10%, 50Hz		100-270V AC (SMPS), 50/60 Hz		230V AC ± 10%, 50Hz	
Note	**Dual Set Point, Scale factor & 2 Relay Option Available on customer request in PC-1044,PC-2044.**					

DIGITAL PRESETABLE COUNTER

With Thumbwheel Setting

MODEL	TWS-1400F	TWS-2500F
Dimension (HxWxD) mm	96 x 96 x 52	72 x 72 x 85
Panel Cutout (mm)	92 x 92	68 x 68
INPUT Input	NPN/PNP Proximity switch / Micro Switch (Configurable) / 230V AC Pulse / Encoder (Factory Set)	
Range	0 To 9999	
OUTPUT	1Relay 2C/O 5A, 230V AC (resistive load)	
SPECIFICATION Operating Mode	Delayed ON/ Delayed OFF (Configurable)	
Count Direction	Up / Down (Configurable)	
Memory	Yes / No (Configurable)	
Speed Selection	Medium(Up to 5000 rpm), Fast(Up to 15000 RPM) (Configurable)	
Supply	100-250V AC (SMPS), 50/60 Hz	

COUNTER

DIGITAL RPM INDICATOR

MODEL	RPM-1201	RPM-2201	RPM-3201	RPM-4201
Dimension (HxWxD) mm	96 x 96 x 42	72 x 72 x 60	48 x 96 x 26	48 x 48 x 70
Panel Cutout (mm)	92 x 92	68 x 68	46 x 92	45 x 45
INPUT RANGE SPECIFICATION — Input	NPN/PNP Proximity Switch (Configurable)			
Range	4 - 5000 RPM			
Supply	230V AC ± 10%, 50Hz	100-270V AC (SMPS),50/60 Hz		

DIGITAL COUNT TOTALISER

MODEL	CT-1000	CT-2000	CT-3000	CT-5000	CT-56G
Dimension (HxWxD) mm	96 x 96 x 42	72 x 72 x 60	48 x 96 x 26	36 x 72 x 95	38 x 62 x 65
Panel Cutout (mm)	92 x 92	68 x 68	46 x 92	32 x 68	31 x 54
INPUT RANGE SPECIFICATION — Input	NPN/PNP Proximity Switch / Micro Switch (Configurable), 230V AC Pulse / Encoder (Any one factory set)				
Range	0 To 999999 Count				
Memory	Non-Volatile Memory				
Reset	Manual Reset, Back Reset (Optional)				
Supply	230V AC ± 10%, 50Hz		100-270V AC (SMPS), 50/60 Hz	230V AC ± 10%, 50Hz	

COUNTER

SPEED / RATIO INDICATOR

MODEL Dimension (HxWxD) mm Panel Cutout (mm)	**MPM-1044 / MPM-2044** 96 x 96 x 52 / 72 x 72 x 75 92 x 92 / 68 x 68	**RPM-1044 / RPM-2044** 96 x 96 x 52 / 72 x 72 x 75 92 x 92 / 68 x 68
INPUT RANGE Start Pulse	NPN/PNP Proximity Switch (Configurable), Proximity Input (Stretch Ratio Indicator)	
Range	0 to 9999 or 0 to 999.9 MPM (Factory set), 0 to 9999 RPM	
OUTPUT	1Relay on RPM/MPM (Factory Set) & Retransmission Output (4-20mA DC / 0-10V DC) (Factory set) (Optional)	
SPECIFICATION Diameter Range	0 to 999.9 MM (Only for MPM / Stretch Ratio MPM)	
Accuracy	±1% of FSD	
Supply	100-270V AC (SMPS), 50/60 Hz	

PROGRAMMABLE COUNTER

COUNTER + RPM

MODEL Dimension (HxWxD) mm Panel Cutout (mm)	**MMC-1046RD** 96 x 96 x 42 92 x 92	**MMC-2046R** 72 x 72 x 50 68 x 68
INPUT RANGE Input	NPN/PNP Proximity switch / Micro Switch (Configurable) / 230V AC Pulse(Factory Set)	
Range	Upper Display Range: (0-999999 Count) , Lower Display Range: (0-9999 RPM)	
OUTPUT Output	1Relay 1C/O 5A, 230V AC (resistive load)	
SPECIFICATION Memory	Non-Volatile Memory	
Reset	Auto Reset / Manual Reset / Back Reset	
Supply	230V AC ± 10%, 50Hz	

PROTECTION RELAY

AUTOMATIC POWER FACTOR CONTROLLER

Intelligent PF Correction Relay

6/8/12/14/16 STAGE APFC RELAY

With

Graphical LCD Display

14 & 16 Stage Available

MODEL Dimension (HxWxD) mm Panel Cutout (mm)	**APFC-96-L6** 96 x 96 x 54 92 x 92	**APFC-9606** 96 x 96 x 54 92 x 92	**APFC-108** 144 x 144 x 70 137 x 137	**APFC-112** 144 x 144 x 70 137 x 137
INPUT Current	50mA to 5AMP AC, (Without CT) (CT Ratio selectable 5/5 A to 9995/5 A) For main CT & capacitor CT		0.01 to 5AMP AC (Without CT) (CT Ratio selectable 5/5 A to 9999/5 A) For main CT & capacitor CT	
Controlling PF Range	+0.80 (Lag) To -0.80 (Lead)		+1.000 (Lag) To -1.000 (Lead)	
Min. Operating Current	1% to 10 % of primary CT in PF & KVAR Mode (User selectable) Factory set 3 % of primary CT in all controlling mode			
Input Voltage	30 to 290V AC (P-N) CAT III		300 to 520V AC (P-P) CAT III	
SENSING	Single CT based sensing True RMS, Scan time 1 Sec. to 999 Sec.		Scan time 1 Sec. to 999.9 Sec.	
OUTPUT	NO-C 6 Relay for capacitor bank		NO-C 8 Relay for capacitor bank + 1 Alarm Relay or 1 Fan Relay	NO-C 12 Relay for capacitor bank + 1 Alarm Relay +1 Fan Relay
USER PROGRAMMABLE FUNCTIONS	Set PF, Relay Switch ON Time, Control Modes, Mains Primary CT Ratio, Relay Steps to be used ,Capacitor Primary CT Ratio (To be used if actual capacitor value is to be measured at any given time)		Main CT Ratio, Capacitor CT Ratio, Minimum operating Current + scan time, Programable KVAR hysteresis	
SPECIFICATION Control Mode	Auto, Manual, KVAR (Set capacitor bank value), Rotational		KVAR / Intel / Manual	
Accuracy	Class 0.5 as per IEC 62053-22		Class 0.5	
Power Supply	230 V AC ± 20% Supply , 50Hz		300V to 520V AC (P-P) CAT III	

PROTECTION RELAY

EARTH LEAKAGE RELAY & EARTH TO NEUTRAL VOLTAGE

NEW LAUNCH

MODEL	ELR-19N	ELR-63	EFR-63
Dimension (HxWxD) mm	96 x 96 x 54	76 x 28 x 85	76 x 28 x 85
Panel Cutout (mm)	92 x 92	DIN Rail Mounting	Din Rail Mounting
INPUT RANGE Input Signal	30mA To 3AMP AC thru. external CBCT	30mA To 3.00A AC thru external CBCT	Current : 5Amp From CBCT
OUTPUT	30mA To 3.00A AC	30mA To 3.00A AC	
	1 Relay (NO-C-NC) 5A,230V AC (resistive load)	1 Relay (NO-C) 5A,230V AC (resistive load)	1 Relay (5A, 230V AC (Resistance load) Earth Fault Current
SPECIFICATION Accuracy	Class 0.5		
Power Supply	100-270V AC (SMPS), 50/60 Hz, Approx 4VA		100 to 270V AC (SMPS), 50/60Hz
Note	**RS-485 MODBUS is available in ELR-19N as per request, CBCT available as per required Inner Diameter**		

SINGLE PHASE - CURRENT RELAYS

MODEL	CC-12
Dimension (HxWxD) mm	96 x 96 x 54
Panel Cutout (mm)	92 x 92
INPUT Current	5A AC Direct (CT ratio selectable 5/5A to 1600/5A)
OUTPUT	1 Relay (NO-C-NC) 5A,230V AC (resistive load)
SPECIFICATION Tripping Facility	High / Low / Inband / Outband / Absolute Low / Absolute Outband Alarm (Configurable)
Accuracy	Class 0.5
Power Supply	100-270V AC (SMPS), 50/60 Hz, Approx 4VA

PROTECTION RELAY

PROTECTION DEVICE - 3 PHASE

DINRAIL MOUNT

MODEL	MPD-192	MPD-152
Dimension (HxWxD) mm	96 x 96 x 52	75 x 55 x 110
Panel Cutout (mm)	92 x 92	Din Rail Mounting
INPUT — Input Signal	3 Ø 4 Wire / 3 Ø 3 Wire	
Voltage	50 - 520V AC (L-L) , 30 - 300V AC (L-N)	
Current	60mA to 5A (CT Selection 5A- 6000A Ac)(Additional Leakage Current Measurement thru CBCT in MPD-19 EL)	
OUTPUT	1st Relay (NO-C-NC) 10 A, 230V AC, (resistive load) 2nd Relay (NO-C) 5A (with simultaneous actuation)	1 Relay (NO-C-NC) 10 A,230V AC (resistive load)
PARAMETER — Tripping Facility	Over Current, Under Current, Short Circuit, Lock Rotor Point, Earth Leakage (In MPD 19EL) Over Voltage, Under Voltage, Phase sequence, Unbalance Over Frequency, Under Frequency, Phase Loss, Neutral Loss	
SPECIFICATION — Accuracy	Class 1.0	
Power Supply	100 to 270V AC (SMPS), 50/60Hz	
Note	**MPD-192 is also available in 415V AC ± 10%, 50Hz Power Supply (ON Request)** **RS-485 MODBUS Communication (Optional) MPD-19 EL-M1** **Earth leakage features are available(Optional) MPD-19 EL ,CBCT Available As per Required Inner Diameter** **External CT 30A,60A,100A Available As per Request**	

THREE PHASE VOLTAGE & CURRENT PROTECTION RELAY

DINRAIL MOUNT

MODEL	VPR-126	VPR-3P	CPR-126 (3 CT)	CPR-126-1C (1 CT)
Dimension (HxWxD) mm	75 x 45 x 110	75 x 45 x 110	75 x 45 x 110	75 x 45 x 110
INPUT — Mounting	Din Rail Mounting			
Input Signal	3Ø 3W / 3Ø 4W		3Ø 3W	1Ø 2W
Voltage	30 to 300V AC (L-N), 50 to 520V AC (L-L)	160 to 300V AC (L-N) 280 to 520V AC (L-L)		
Current			0.1 to 5Amp (CT Selection 5/5 To 999/5 A AC)	
OUTPUT	1st Relay (NO-C-NC) 2nd Relay (NO-C-NC) (Optional)	1st Relay (NO-C-NC) 2nd Relay (NO-C-NC)	1Relay (NO-C-NC)	
PARAMETER — Tripping Facility	Over Voltage Under Voltage Over Frequency Under Frequency Phase Loss Phase Sequence Asymmetry & Neutral Loss	Over Voltage Under Voltage Over Frequency Under Frequency Phase Loss Phase Sequence Asymmetry	Over Current Under Current Asymmetry Single Phase Preventer (SPP)	Over Current Under Current
SPECIFICATION — Accuracy	Class 1.0	No Power Supply to be given separately	Class 1.0	
Power Supply	100 to 270V AC (SMPS), 50/60Hz		100 to 270V AC (SMPS), 50/60Hz	
Note	**External CT 30A,60A,100A Available with CPR-126 & CPR-126-1C As per Request**			

MODEL Dimension (HxWxD) mm Panel Cutout (mm)	VMR-13 96 x 96 x 43 92 x 92	VMR-23 72 x 72 x 45 68 x 68	EN-19N 96 x 96 x 54 92 x 92
INPUT Input	Voltage : 50 to 520V AC (L-L) 30 to 300V AC (L-N)		0 To 10 Voltage AC
OUTPUT	1st Relay 5A, 230V AC (Resistance load)1st Relay 10A, 230V AC (Resistance load) 2nd Relay (Optional)		00.00 To 10.00 Voltage AC 1 Relay (NO-C-NC) 5A,230V AC (resistive load)
TRIPPING PARAMETER	Over Voltage / Under Voltage Over Frequency / Under Frequency Phase Loss / Phase Sequence Asymmetry & Neutral Loss		
POWER SUPPLY	230V AC ±20%, 50Hz	50-520V AC, 50/60Hz	100-270V AC, 50/60Hz
Note	**RS-485 Modbus Available in EN-19N As Per Request**		

MULTI CHANNEL CURRENT TRANSDUCER

CT upto 100A

DINRAIL MOUNT

MODEL Dimension (HxWxD) mm Panel Cutout (mm)	MCS-63 76 x 28 x 116 Din Rail Mounting
INPUT Input	Current : 2A to 60A Direct UP to 6 Current Scanner
OUTPUT	RS-485 Modbus
POWER SUPPLY	24V DC
Note	**3CT,4CT & 6CT Available** **100 amp also available**

ENERGY

MULTIFUNCTION METER

MODEL	AVH-14	MFM-13
Dimension (HxWxD) mm	96 x 96 x 54	96 x 96 x 54
Panel Cutout (mm)	92 x 92	92 x 92
INPUT Input Signal	3Ø 3 Wire / 3Ø 4Wire /1Ø 2Wire	
Voltage	Primary : 100V to 520kV (Programmable), Secondary : 100V to 520V (L-L) (Programmable)	
Current	Primary : 5A to 6000A (Programmable), Secondary : 5A/1A (Programmable)	
PARAMETER		
KW Total	0.000 - 9999 kW	
KW Per Phase	0.000 - 9999 kW	
WH Total	000.000 - 999999 MWh	
Power Factor Average (PF)	0.100 - 1.000	
Power Factor per phase (PF)	0.100 - 1.000	
KVA Total	0.000 - 9999 kVA	
Vah Total	000.000 - 999999 MVAh	
Frequency (Hz)	45 - 60 Hz	
KVAr Total	0.000 - 9999 kVAr	
Varh Total	000.000 - 999999 MVArh	
Load hours	9999.59 Hrs/Min.	
No load hours	9999.59 Hrs/Min.	
RPM	1500 RPM	
COMMUNICATION	RS-485 MODBUS (Optional) Pulse Output (By Default)	
SPECIFICATION		
Accuracy	For Voltage & Current Class 0.5 / For Power & Energy Class 1.0	
Power Supply	100-270V AC (SMPS), 50/60 Hz, Approx 4VA	

3 PHASE ENERGY & POWER METER

MODEL Dimension (HxWxD) mm Panel Cutout (mm)	**EPM-14** 96 x 96 x 54 92 x 92	**EM-10** 96 x 96 x 43 92 x 92	**EM-1P (Single phase)** 96 x 96 x 43 92 x 92
INPUT Input Signal Voltage Current	3Ø 4 Wire 300V AC (L-N) / 520V AC (L-L) 5/5 to 6000/5A AC CT Ratio Selectable		1Ø 2Wire 30 - 300V AC (L - N) 5/5 to 4000/5A AC
SPECIFICATION Reset Measuring Range Accuracy Power Supply	kWH Reset by front key 0.000 to 9999 kW (Active power) 0 to 999999 kWh (Active energy) Class 0.5 230V AC ± 10%, 50Hz	By front Keypad 0 to 999999 kWh (Active energy) Class 0.5 230V AC ± 10%, 50Hz	Reset by front key 0 to 99999.9 kWh (Active energy) Class 0.5 230V AC ± 10%, 50Hz
Note	**RS-485 Modbus Available in EPM-14 As Per Request**		

3 PHASE AND 1 PHASE PANEL METER

VAF Meter

NEW LAUNCH

MODEL Dimension (HxWxD) mm Panel Cutout (mm)	**AVF-29T** 72 x 72 x 45 68 x 68	**AVF-19D** 96 x 96 x 43 92 x 92	**AVF-133** 96 x 96 x 54 92 x 92
INPUT Input Signal Voltage Current	3Ø 4 Wire / 3Ø 3Wire / 1Ø 2 Wire 30 To 300V AC (L-N) / 50 To 520V AC (L-L) Primary : 6000A Secondary : 5A		3Ø 4 Wire / 3Ø 3Wire / 1Ø 2 Wire 30 To 300V AC (L-N) / 50 To 520V AC (L-L) Primary : 10000A Secondary : 5A
PARAMETER	Voltage (L-L) Voltage (L-N) Average Current (L1,L2 & L3) Line Current (L1,L2 & L3) Phase Sequence Average Voltage (L-N) Average Voltage (L-L) Frequency Load Hour/No Load Hour RPM		Voltage (L-L) Voltage (L-N) Average Current (L1,L2 & L3) Line Current (L1,L2 & L3) Phase Sequence Average Voltage (L-N), Average Voltage (L-L), Frequency, Load Hour, RPM
SPECIFICATION Accuracy Power Supply	Class 0.5 100 To 270V AC(SMPS), 50/60Hz	Class 0.5 230V AC 50Hz	Class 0.5 100 To 270V AC(SMPS), 50/60Hz

Note: In AVF-29T Range: Primary PT 100V to 520KV, CT Ratio Primary up to 9999 & secondary 5/1A

ENERGY

3 PHASE AMPERE METER

MODEL Dimension (HxWxD) mm Panel Cutout (mm)	**AMP-19** 96 x 96 x 43 92 x 92	**AMP-13** 96 x 96 x 43 92 x 92	**AMP-23** 72 x 72 x 45 68 x 68
INPUT Current	0.5A to 5A Primary : 5A to 6000 AC CT Selction Secondary : 5A	0.5A to 5A Primary : 5 to 10K Ampere (Selectable) Secondary : 1A/5A (Selectable)	0.5A to 5A Primary : 5A to 6000 AC CT Selction Secondary : 5A
SPECIFICATION Accuracy	Class 0.5	Class 0.5	
Power Supply	230V AC ± 10%, 50Hz	100-270V AC (SMPS), 50/60 Hz	
Note	**RS-485 Modbus Available in AMP-13**		

3 PHASE VOLT METER

MODEL Dimension (HxWxD) mm Panel Cutout (mm)	**VOLT-19** 96 x 96 x 43 92 x 92	**VOLT-13** 96 x 96 x 43 92 x 92	**VOLT-23** 72 x 72 x 45 68 x 68
INPUT Voltage	50 to 520V AC (L-L)	50 to 520V AC (L-L) 30 to 300V AC (L-N) Primary : 100 to 999Kv AC (L-L)(Selectable) Secondary : 100 to 520V AC (L-L) (Selectable)	50 to 520V AC (L-L) 30 to 300V AC (L-N) Primary : 100 to 999Kv AC (L-L)(Selectable) Secondary : 100 to 520V AC (L-L) (Selectable)
SPECIFICATION Accuracy	Class 0.5	Class 0.5	Class 0.5
Power Supply	100-270V AC (SMPS), 50/60 Hz	230V AC ± 10%, 50Hz	100-270V AC (SMPS), 50/60 Hz

SINGLE PHASE AC PANEL METER
VOLT / AMP Meter

MODEL	AV-14/11V	AV-24/21V	AV-34/31V	AV-41CT/41A/41V
Dimension (HxWxD) mm	96 x 96 x 42	72 x 72 x 35	48 x 96 x 26	48 x 48 x 46
Panel Cutout (mm)	92 x 92	68 x 68	46 x 92	45 x 45
INPUT Ampere (AC)	5A AC Direct			
CT Ratio	Primary: 5/5A to 4000/5A AC			Primary: 5/5A to 2000/5A AC
Volatge (AC)	30 to 500V AC			
SPECIFICATION Accuracy	Class 0.5			
Power Supply	230V AC ±10%, 50Hz			
Note	**30A AC Direct CT Available at back side (AV-11A, AV-21A, AV-31A, AV-41A)**			

SINGLE PHASE AC PANEL METER
VOLT + AMP meter

MODEL	AV-12	AV-22	AV-33	AV-44
Dimension (HxWxD) mm	96 x 96 x 43	72 x 72 x 60	48 x 96 x 65	48 x 48 x 46
Panel Cutout (mm)	92 x 92	68 x 68	46 x 92	45 x 45
INPUT Current Input	Primary: 5/5A to 2000/5A AC			30.0A AC Direct
Voltage Input	30 to 500V AC			30 to 500V AC
SPECIFICATION Accuracy	Class 0.5			
Power Supply	230V AC ±10%, 50Hz			
Note	**30A AC Direct CT Available at back side**			

ENERGY

DC PANEL METER

VOLT / AMP Meter

MODEL Dimension (HxWxD) mm Panel Cutout (mm)	**AV-14DA/14DV** 96 x 96 x 43 92 x 92	**AV-24DA/DV** 72 x 72 x 60 68 x 68	**AV-34DA/34DV** 48 x 96 x 65 46 x 92	**AV-41DV** 48 x 48 x 70 45 x 45
INPUT Ampere (DC)	0 to 9999 Ampere DC Through 75mV DC external shunt			
Voltage (DC)	19.99V DC / 49.99V DC / 99.99V DC / 199.9V DC / 750V DC (Factory set)			
SPECIFICATION Accuracy	± 1% Of Full Range ±1 Count			
Power Supply	230V AC ±10%, 50Hz			
Note	**0 to 5A DC / 10A DC / 20A DC Direct through shunt is available in model AV-14DZ, 24DZ, 34DZ**			

SINGLE PHASE AC PANEL METER

MODEL Dimension (HxWxD) mm Panel Cutout (mm)	**PF-11 / PF-13** 96 x 96 x 54 92 x 92	**WM-11** 96 x 96 x 43 92 x 92	**FRQ-11** 96 x 96 x 42 92 x 92
INPUT Input Signal	1Ø 2 Wire / 3Ø 4 Wire	1Ø 2 Wire	1Ø 2 Wire
Voltage	20 TO 300V / 50 to 520V	300V AC (L-N)	300V AC (L-N)
Current	5A AC	0.5 to 5Amp (CT Selection 5 - 50A)	
CT Selection Secondary Function		5A/1A (Configurable)	
SPECIFICATION Measuring Range		0 to 15Kilo Watt	50.0 HZ
Accuracy	Class 0.5	Class 0.5	Class 0.5
Power Supply	230V AC ±10%, 50Hz	230V AC ± 10%, 50Hz	230V AC ± 10%, 50Hz
Note		**Also available in 199.9 Watt Range** **1Relay on kW is available in WM-11**	

DC PANEL METER

VOLT / AMP Meter

MODEL Dimension (HxWxD) mm Panel Cutout (mm)		**MFM-14DC** 96 x 96 x 54 92 x 92
INPUT	Ampere (DC)	0 to 9999A DC Through 75mV DC external shunt
	Voltage (DC)	0 to 750V DC
	Watt (DC)	0000 to 7499 KW DC
SPECIFICATION	Accuracy	± 1% Of Full Range ±1 Count
	Power Supply	100 - 270V AC , 50/60 Hz
	Note	**RS-485 & Relay available on request**

MODEL Dimension (HxWxD) mm Panel Cutout (mm)		**DC-14** 96 x 96 x 54 92 x 92	**DC-24** 72 x 72 x 45 68 x 68	**VAW-34DC** 48 x 96 x 26 46 x 92
INPUT	Ampere (DC)	0 to 9999 Ampere DC Through 75mV DC external shunt		
	Voltage (DC)	0 to750V DC		
	Watt (DC)	0000 to 7499 KW DC		
SPECIFICATION	Accuracy	± 1% Of Full Range ±1 Count		
	Power Supply	100 - 270V AC , 50/60 Hz		

JUMBO DISPLAY

JUMBO DISPLAY INDICATORS

Single & Double Side

8" Display

4" Display

MODEL Dimension (HxWxD) mm		**PTC-8004** 330 x 630 x 50	**PIC-6004A/ MSI-6004/ UTI-6004** 160 x 380 x 50
INPUT	Input	0-10V DC /4-20mA DC / 0-20mA DC (Configurable) , Pulse through Encoder/Proximity (Factory Set) J/ K/ PT-100 2Wire 3Wire (Configurable), RS-485 MODBUS.	
	Range	**J** (0°C - 400°C), **K** (0°C - 1200°C) , **PT-100 2Wire or 3Wire** (-99.9°C - 400.0°C), (-999 to 9999, 0 to 9999 Count For Analog Input),	
OUTPUT	Output 1 Output 2	2 Relays for Alarm output. (Optional) 24V@30mA DC Transmitter Supply for Analog Input (Optional)	
SPECIFICATION	Accuracy	±1% of FSD	
	Supply	100-270V AC (SMPS), 50/60 Hz / 24V DC (Factory Set)	
	Note	**1) For Analog Input model : PIC 8004A / PIC 6004A / PIC 3004A** **2) For Proximity Input Model : PC 6004 / MPM 6004 / RPM 6004** **3) For Temperature Input Model : UTI 3004 / UTI 6004**	

PROGRAMMABLE JUMBO DISPLAY COUNTER

4" Display

MODEL Dimension (HxWxD) mm		**PC-6006 (Single Side)** 160 x 570 x 50
Display		Single Display: 7 Segment, 6 Digit, 4" Red Led Display
INPUT	Input	NPN/PNP Proximity switch & Micro Switch (Configurable)
	Range	0-999999 Count
OUTPUT	Output	1Relay 1C/O 5A,230V AC (resistive load) or SSR Drive O/P 12V DC, 20mA(Optional)
SPECIFICATION	Memory	Non-Volatile Memory
	Reset	Auto / Manual Reset / Back reset
	Supply	100-270V AC (SMPS), 50/60 Hz
	Note	**RS-485 Input available as per request**

HUMIDITY + TEMPERATURE CONTROLLER

2.25" Display

MODEL Dimension (HxWxD) mm	**MHT-9044 (Humidity + Temp. Controller)** 160 x 380 x 50
Display	**Upper**: 7 Segment, 4 Digit, 2.25" Red Led Display - Temperature
	Lower: 7 Segment, 4 Digit, 2.25" Green Led Display - Humidity
INPUT Input	S-1: PT-100 2Wire or 3Wire (RTD) S-2: Humidity Sensor
Range	**PT-100 2Wire or 3Wire** (-99°C to 400°C) **Humidity Sensor**
OUTPUT Output 1	1st Relay for Temperature and 2nd Relay for Humidity.
SPECIFICATION	
Control Action	ON-OFF
Accuracy	±1% of FSD
Supply	100-250V AC (SMPS), 50/60 Hz

PROGRAMMABLE JUMBO LENGTH COUNTER

2.25" Display

MODEL Dimension (HxWxD) mm	**LC-9004** 160 x 380 x 50
Display	**Upper**: 7 Segment, 6 Digit, 2.25" Red Led Display - Total Meters
	Lower: 7 Segment, 4 Digit, 2.25" Green Led Display - Meter Per Minute
INPUT Start Pulse	NPN/PNP Proximity Switch (Configurable) / Encoder (Factory set) , Micro Switch
RANGE	0-99999.9 / 0-999999 Meter (Configurable)
OUTPUT	1Relay 1C/O 5A, 230V AC (resistive load) or SSR12V max 20mA DC Output (Any one factory set)
SPECIFICATION	
MPM Range	999.9 MPM
Diameter	0-9999.99 MM
Memory	Non-Volatile Memory
Reset	Auto Reset / Manual Reset facility & front and back reset facility
Supply	100-250V AC (SMPS), 50/60 Hz
Note	**RS-485 Input / Output available as per request**

JUMBO DISPLAY

JUMBO DISPLAY SELECTION GUIDE

Single & Double Side

Sr.No	Product model	Display Digit	Input	Display Parameter
1	PIC-6004A	4	4-20mA/0-10V/0-20mA DC	Process Value (-999 to 9999)
2	UTI-6004	4	J/K/PT-100	Temperature
3	PTC-6004	4	4-20mA/0-10V/0-20mA DC/ J/K/PT-100	Process Value(-999 to 9999)/ Temperature
4	PC-6004	4	NPN/PNP Proximity	Count
5	RPM-6004	4	NPN/PNP Proximity	RPM
6	MPM-6004	4	NPN/PNP Proximity	MPM
7	RS-6004	4	RS-485	Numeric Value
8	LC-9004	6+4	NPN/PNP Proximity	Total Length & MPM
9	MHT-9044	4+4	PT-100 + RH Sensor	Temperature & Humidity
10	PC-6006	6	NPN/PNP Proximity	Count
11	RS-6006	6	RS-485	Numeric Value
12	PTC-8004 (8 Inch Display)	4	4-20mA/0-10V/0-20mA DC/ J/K/PT-100	Process Value(-999 to 9999)/ Temperature

DINRAIL MOUNT

DIN RAIL PROTECTION RELAY

22 ENERGY SERIES

MODEL	VPR-22
Dimension (HxWxD) mm	90 x 22.5 x 67.5
Mounting	Din rail mounting
INPUT (Input)	Input Voltage : 280 to 520V AC (L-L) 3Ø-3W
OUTPUT	1 Relay (5A, 230V AC (Resistance load)
TRIPPING PARAMETER	Under Voltage Over Voltage Phase asymmetry Phase sequence Phase loss
POWER SUPPLY	No Power Supply to be given separately

MODEL	SPP-22 (Single Phase Preventor)
Dimension (HxWxD) mm	90 x 22.5 x 67.5
Mounting	Din rail mounting
INPUT (Input)	Input Voltage : 280 to 520V AC (L-L) 3Ø-3W
OUTPUT	1 Relay (5A, 230V AC (Resistance load)
TRIPPING PARAMETER	Phase loss Phase sequence Phase asymmetry
POWER SUPPLY	No Power Supply to be given separately

MODEL	CPR-22 (1 CT)
Dimension (HxWxD) mm	90 x 22.5 x 67.5
Mounting	Din rail mounting
INPUT (Input)	Input Current : 100mA to 5A AC
OUTPUT	1 Relay (5A, 230V AC (Resistance load)
TRIPPING PARAMETER	Under Current Over Current
POWER SUPPLY	230V AC ±20%, 50Hz

ANALOG TIMERS

22 TIMER SERIES

MODEL	DT 10S , DT 30S, DT 60S, DT-30M ON / OFF Delay Timer
Dimension (HxWxD) mm	90 x 22.5 x 67.5
Mounting	Din rail mounting
RANGE Time Range	0 to 10 Sec (For DT 10S) 0 to 30 Sec (For DT 30S) 0 to 60 Sec (For DT 60S) 0 to 30 Min (For DT 30M)
OUTPUT	1 Relay 1C/O, 5A 230V AC (Resistive Load)
POWER SUPPLY	230V AC ±20%, 50Hz / 24V DC/ 415V AC (Factory set)

MODEL	DI-22 - ON / OFF Delay Timer
Dimension (HxWxD) mm	90 x 22.5 x 67.5
Mounting	Din rail mounting
RANGE Time Range	0.1 Sec to 10 Sec/Min/Hour
OUTPUT	1 Relay 1C/O, 5A 230V AC (Resistive Load)
POWER SUPPLY	230V AC ±20%, 50Hz & 24V AC/DC

MODEL	DI-22U - ON / OFF Delay Timer
Dimension (HxWxD) mm	90 x 22.5 x 67.5
Mounting	Din rail mounting
RANGE	0.1 Sec to 10 Sec/Min/Hour
OUTPUT	1 Relay 2C/O, 5A 230V AC (Resistive Load)
POWER SUPPLY	12V to 240V DC & 20V to 240V AC,50/60Hz

MODEL	SD-22
Dimension (HxWxD) mm	90 x 22.5 x 67.5
Mounting	Din rail mounting
RANGE	Time Range : 0 to 60 Sec Pause Time : 50 ms or 100 ms Selection by front key
OUTPUT	2 Relay O/P (1C/O, 5A 230V AC,Resistive Load) 1st Relay for star connection & 2nd Relay for delta connection
POWER SUPPLY	230V AC ±20%, 50Hz
Note	415V AC Supply Available on Request

MODEL	CYL-22
Dimension (HxWxD) mm	90 x 22.5 x 67.5
Mounting	Din rail mounting
RANGE Time Range	0.1 Sec to 10 Sec/Min/Hour
OUTPUT	1 Relay O/P (2C/O, 5A 230V AC (Resistive Load)
POWER SUPPLY	230V AC ±20%, 50Hz

MODEL	FRT-22
Dimension (HxWxD) mm	90 x 22.5 x 67.5
Mounting	Din rail mounting
RANGE	Forward & Reverse Time Range : 0.1 Sec to 10 Hour Pause Time : 1 Sec to 100 Sec
OUTPUT	2 Relay O/P (1C/O, 5A 230V AC (Resistive Load) 1st Relay for Forward Time & 2nd Relay for Reverse Time
POWER SUPPLY	230V AC ±20%, 50Hz

ANALOG TIMERS

22 TIMER SERIES

MODEL Dimension (HxWxD) mm Mounting	POD-22 - Power OFF Delay Timer 90 x 22.5 x 67.5 Din rail mounting
RANGE — Time Range	0 to 180 Sec
OUTPUT	1 Relay 2C/O, 5A 230V AC (Resistive Load)
POWER SUPPLY	100 to 270V AC ±20%, 50/60Hz

MODEL Dimension (HxWxD) mm Mounting	WLC-22 - Water Level Controller 90 x 22.5 x 67.5 Din rail mounting
INPUT	3 nos. prods S1 : Common, S2 : Low, S3 : High
OUTPUT	1 Relay 1C/O, 5A 230V AC (Resistive Load)
SENSITIVITY	1 to 200 kilo ohms
TRIP DELAY	0.5 Sec (Approx)
POWER SUPPLY	100 to 270V AC ±20%, 50/60Hz

TD-144
0.5 HP, 2.0 HP
1.0 HP, 3.0 HP

TD-13B
0.5 HP, 1.0 HP

TD-13M
0.5 HP, 1.0 HP, 2.0 HP, 3.0 HP

DESCRIPTION	MODEL	W x H x D (mm)	RANGE
Panel Mounting Type	TD-144	140 x 140 x 190	0.5, 1, 2 HP
Wall Mounting Mould Type	TD-13M	170 x 235 x 85	0.5, 1,HP
	TD-13M	210 x 285 x 110	2, 3 HP
Wall Mounting Panel Type	TD-13B	165 x 240 x 95	0.5, 1 HP
	TD-13B	230 x 300 x 105	2, 3 HP
Panel Mounting Type	TD-11	96 x 96 x110	0.5 HP

AC-DC TESTING PANEL

AC DC-15A (RS-485 MODBUS Compatible)

MODEL Dimension (HxWxD) mm		AC POWER METER 153 x 280 x 80	DC POWER METER
PARAMETER	Voltage	10-300V AC	5-150V DC
	Ampere	10mA-5.000 Amp AC	10mA-5.000 Amp AC
	Watt	0-1500 Watt	0-750 Watt
	PF	0-1.000 PF	
	Effciency		0-100.0%
SPECIFICATION	Accuracy	Class 1.0	
	Power Supply	230V AC ±10%, 50Hz	

Features SSR

- Control Input Voltage : 4-32V DC / 4-16mA
- Load Output Voltage : 24-480V AC
- Zero Cross over SSR Design
- Max Load Current : 25A / 40A / 50A / 70A
- Input LED Indication
- PIV : 800V

Product code	Input	Output	
		Voltage	Current using Heat sink
RS-25A	4-32V DC	24-480V AC	16A
RS-40A	4-32V DC	24-480V AC	18A
RS-50A	4-32V DC	24-480V AC	32A
RS-70A	4-32V DC	24-480V AC	44A

Note : Use Heat sink when load current is above 10A.

Features SMPS

- Input Voltage : 100V-240V AC
- Output Voltage : 24V DC,5A
- Rated Power : 120W
- Size : 105X45X110 (Din Rail)
- Protection Available : Overload, Over voltage, Output short circuit, Over Temperature

iACCL

AUTOMATIC CHANGEOVER WITH CURRENT LIMITER

Current | Voltage | Frequency | Energy

FOR A SEAMLESS, CHANGEOVER BETWEEN POWER SOURCES!

Features (Three Phase) :

- Micro controller based automatic source changeover with neutral isolation.
- Intelligent re-connection once trip occurs, either due to over voltage or over load.
- Energy, Current, Voltage measurement for DG & Current measurement for EB. Optional EB Energy and Voltage measurement for 3 phase.
- Intelligent tripping: Inverse curve (Higher the overload faster the trip).
- MCB reset (OFF & ON) option available for over load in DG for iACCL M300 & 330
- SMPS based design for low power consumption.
- Manual reset provision when in sleep mode for restoring power supply Or through the mobile app when network is available.
- Intelligent changeover with R phase or any one phase failure (Manufacturing option).
- Under/Over voltage protection for DG (In iACCL 600 for EB also)
- Programmable threshold setting for both sources independently.
- DG delay programmable for each ACCL to avoid loading the generator at a time.
- Potential free contact for connecting power load only in EB (single phase / relay version) optional.
- Automatic trip if sum of power circuit and lighting circuit is >40A (single phase / relay version) optional.
- Individual phase overload monitoring (Any Phase > set current, it trips).
- DG Phase selection - Programmable
- EB single phase missing programmable for Y and B phase for iACCL M600

Unique Features :

- Intelligent Overload tripping with AC1 to AC3 behavior.
- Inbuilt display and measurement of A, V, F & kWh on the generator side and mains side for iACCL M600
- Resetting the trip by key press or MCB or through communication.
- Wide range of operational voltage: (180 - 260) VAC
- Display of overload information for both EB and DG, along with phase indication.
- Wiring simplicity for lighting and power with common neutral in iACCl M100R Single Phase.
- Installation is done as DIN rail for single phase and surface mountable for 3 phase (Optional DIN rail for 3 phase up to 40A).
- Eco friendly thermoplastic and fire retardant enclosure.
- More than 20000 operations.
- Reason for trip is displayed.
- Optional Prepaid feature only for DG
- RS 485 communication.(Optional)
- Protection against neutral current flow beyond threshold.
- Withstands 6kV rated impulse voltage.

Features (Single Phase) :

- Under and Over Voltage protection when load is running on DG.
- Protect DG with Staggered Delay and Inverse curve Protection.
- Reduced wiring complexity and installation time- Terminal 16mm2 capacity.
- Programmable DG current limiting features on site through configuration tool.
- EB/DG Input source Interchangeability

Mechanical Specification :

Single Phase

iACCL M400/400

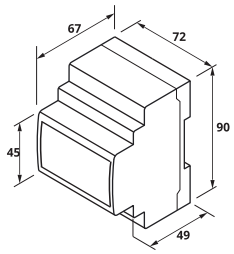

iACCL M100R

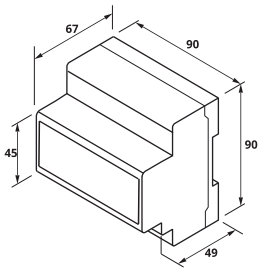

iACCL M300 (32A-63A) | M330 (40A)

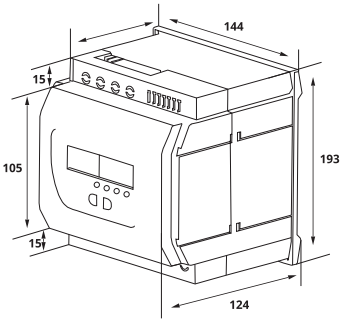

iACCL M300 | M600 (80A)

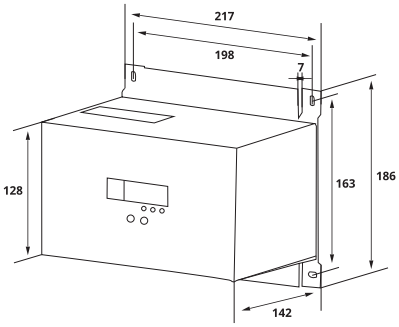

iACCL M300 | M600 (100A-125A)

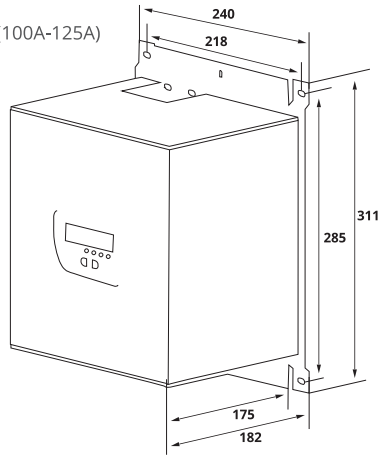

Technical Specification:

	M400/400	M100R	M300	M300	M300	M330	M600	M600	M600
ELECTRICAL CHARACTERISTICS									
Rated Current	25/32A	25/32A	40|63A	80A	100|125A	40A	40|63A	80A	100|125A
No. of Poles	1P+N	1P+N+1 Power Load	3P+N	3P+N	3P+N	EB:3P+N DG:1P+N	3P+N	3P+N	3P+N
Rated Operating Voltage	240VAC	240VAC	415/240VAC	415/240VAC	415/240VAC	415/240VAC	415/240VAC	415/240VAC	415/240VAC
Rated Frequency	50Hz	50Hz	50Hz	50Hz	50Hz	50Hz	50Hz	50Hz	50Hz
Utilization Category AC1	25/32A	25/32A	40|63A	80A	100|125A	40A	40|63A	80A	100|125A
Utilization Category AC3	25/32A	25/32A	32|40A	63A	80A	32|40A	32|40A	63A	80A
Ingress Protection:	IP 20 & Double Insulation (As per IEC 61010-1)								
Accuracy	Class 1								
PROGRAMMING FEATURES									
Energy Selection	Wh /VAh								
DG under voltage	170-210VAC		165-210VAC				170-210VAC		
DG over voltage	240-270VAC								
DG Maximum Current Limit	25/32A	25/32A	40|63A	80A	100|125A	40A	40|63A	80A	100|125A
EB Maximum Current Limit			40|63A	80A	100|125A	40A	40|63A	80A	100|125A
DG Start time	1sec-30sec								
Cycle time	6sec-150sec								
No. of Cycles	5 to 10								
DG Selection	NA		DG Output selection				EB and DG Output selection		
METERING PARAMETERS									
EB Source	NA		Current				Current, Voltage, (PF, W, Wh optional)		
DG Source	Current, Voltage, PF, W, VA, Wh/VAh								
Trip Reset	Reset Key	Reset Key	Reset Key and MCB	Reset Key and MCB	Reset Key and MCB	Reset Key and MCB	Reset Key	Reset Key	Reset Key
INDICATION	EB Source, DG Source, Trip, Minus, Communication and Reason for Trip								
COMMUNICATION									
Device ID & Parity	1 to 247 & Odd, Even, None (Prefered Even)								
Protocol & Interface	Modbus. RTU & RS 485								
Baud rate	4800 bps to 19200 bps (Preferred 9600 bps)								
Isolation	2000 volts AC isolation for 1 minute between communication & other circuits								
DISPLAY									
Display type	LED 1 Row								
Instantaneous Digits	4								
Integrated Digits	4					6			
FAULT TRIPPING									
EB Source			Over Current, Phase Missing				Over Current, Under / Over Voltage Phase Missing		
DG Source	Over Current, Under / Over Voltage Phase Missing								
MECHANICAL CHARACTERISTICS									
Mounting (Vertical)	Din Rail		Surface Mounting						
Outline Dimension in HxWxD mm	90x72x67	90x90x67	193x144 x137 mm	186x217 x142 mm	240x310 x182 mm	193x144 x137 mm	193x144 x137 mm	186x217 x142 mm	240x310 x182 mm
Weight in kg	280 grams	350 grams	2.1 kg	4.5 kg	7 kg	2.1 kg	2.1 kg	4.5 kg	7 kg
Torque	1 N-m	1 N-m	2 N-m	2 N-m	2.5 N-m	2 N-m	2 N-m	2 N-m	2.5 N-m
Wire gauge	11 AWG	11 AWG	6 AWG	4 AWG	1 AWG	6 AWG	6 AWG	4 AWG	1 AWG
STANDARDS									
Compliance	IEC 60947-6-1								
USE ENVIRONMENT CHARACTERISTICS									
Temperature	Ambient: -5 to +55^0 C, Storage: -25 to +75^0 C, Operating: -10 to +55^0 C, Operating Humidity: 5 to 85% RH								
Environmental	Class B								
Pollution degree	2								

APFC

Automatic Power Factor Controller

Power | Frequency | PF | VAR | 8/12/16 stage control

SAVE ENERGY & AVOID PENALTIES

The APFC440 automatic power factor controller has been designed to help you improve the efficiency of your industry by reducing reactive losses, apparent power demand charges and helps you in avoiding penalties.

Features:

- True RMS Measurements.
- Simultaneous sampling of voltage and current.
- Auto Learning of connection type.
- Automatic calculation of C/k ratio.
- High and Low of V, A, PF for last one minute through communication
- Accuracy class: class 1.0 as per standard IEC 62053-21.
- 3Phase measurement.
- 8/12/16 switching relay outputs.
- Auto recognition of the CT phase.
- Two quadrant operations.
- 21 pre-programmed control series of capacitor values required for the compensation network.
- Auto-learning of the number of capacitors connected and their value.
- Capacitance-based power factor correction - takes care of variations in voltage and frequency.
- Records the number of switching and ON hours of each capacitor.

Display Parameters

- Basic
- Power
- Energy
- THD parameters.

Built-in alarms

- Alarm/Fault Detection
- Overcompensation
- Under Compensation
- Over Voltage
- Over Current
- Under Voltage
- Under Current
- Reverse Amps
- Over Harmonics Voltage and Current.

Applications

- Manufacturing industries
- Chemical industry
- Cement plant
- Sugar plant
- Textile
- Hospitals
- Automobile industry, etc.

Control Features

- Intelligent Power Factor Controlling based on the capacitor bank switching's history (Number of operations, ON Time) which improves the capacitor life time
- Communication of the live kVAR value based on voltage & frequency (optional).
- Controlling based on VAR parameter.
- Control principle – nearest value first.
- Minimum sensing current of 500mA for controlling operation.
- Communication via RS485 over Modbus RTU protocol.
- On-site Programmable:
  - Alarm display.
  - Selectable stages
  - Alarm levels based on the comfort level of the user.
  - Password protection
  - CT ratio suitable for any load.
  - 3 phases or 1 CT option.
  - Star/Delta/1Phase programmable.
- Disables the capacitor bank automatically when the capacitor is deteriorated beyond a certain level.
- Additional monitoring of the power level of individual capacitor banks.
- Improved sensing of switch ON / OFF capacitor within the programmed level and not towards UPF.
- Improved methodology in ON/OFF switching.
- Improved life cycle of the capacitor with Lesser count of switching to improve the life cycle of the capacitor bank.
- Improved power factor calculation based on reference Voltage and Frequency.
- Improved method of capacitor switching when the alarm occurs.
- Threshold setting Lag-to-Lag and Lead-to-Lead

Mechanical Specification:

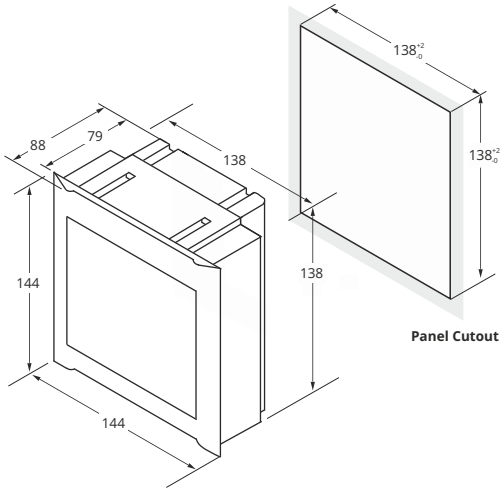

Technical Specification:

Accuracy	Class 1: IEC 62053-21 (Default) Class 0.5: IEC 62053-22 (Optional).
Update Rate	1 sec
Power system type	Programmable: Star (3Phase 4Wire), Delta (3Phase 3Wire), 3U.1A(3 voltages, 1current)
Sensing / Measurement	True RMS, 1 Sec update time. 2 Quadrant Power & Energy.
Input voltage (Measurement)	4 Voltage inputs (V1, V2, V3, VN) Programmable 110 or 415V LL Nominal Primary Programmable up to 999 kV.
Burden	0.2VA Max. per phase
External Fuse Rating	3 Amps
Frequency	45 Hz - 65Hz
Input Current (Measurement)	Current inputs (A1, A2, A3) 5mA - 6A (Field configurable 1A or 5A) Primary Programmable up to 99 kA
Overload	10A max continuous, 50A max for 3 Sec
Burden	0.2VA Max. per phase
Auxiliary Supply (Control Power)	180 to 300V AC/DC, 40-70Hz
Burden	10VA Max
External Fuse Rating	200mA Slow blow type
CT PT Ratio Max	2000 MVA Programmable
Protection Class	3
Measurement Category	CAT lll (As per IEC 61010)
Humidity	5% to 95% non-condensing
Pollution Degree	2 (As per IEC 61010)
Altitude	Below 2000m
Insulation	Double Insulation (As per IEC 61010-1)
Ingress Protection	IP 51 (front facia)
Operating Temperature	-10°C to + 55°C (14°F - 131°F)
Storage Temperature	-25°C to +70°C (-13°F - 158°F)
Wire Gauge (Connecting wires)	26 - 10AWG (4.0mm2).
Container material	PC
Communication	RS485 serial channel connection Industry standard Modbus. RTU protocol. 2000 volts AC isolation for 1 minute between communication and other circuits.
Baud rate	4800, 9600, 19.20K, 38.40K (Preferred 9600 bps)
Isolation	2000 volts AC isolation for 1 minute between communication and other circuits.
Parity	Even, Odd, No
Device/Meter ID	1 to 247 (Programmable)
Relay contact rating	SPST, 3A@240VAC

Display Specifications

Display Type	Customised 3 row 4 digit LED with % Level indicator
Dimension	3Row 4Digit 0.56" (14mm) Red
Color	Black Face and Red segment
% Bar Graph	% Load indication bar graph with programmable parameters (A, VA, WATT)
Display Resolution	4 digits for instantaneous parameters, 8 digits for integrated parameters.
Keys	4

Mechanical Specifications

Dimension	144mm X 144mm
Mounting	Panel mount
Panel Cut-out Dimension	138mm X 138mm
Weight	Without Packing 600gms, With Packing 700gms

ATeS

Automatic Transfer Switch

Real-Time Monitoring | Improve Productivity

CONTROL YOUR POWER SOURCES!

The smartest approach to provide continuous power for critical applications is to transfer sources between the load. ATeS (Automatic Transfer Switch) is designed with automatic start/stop DG operation to ease the transfer between primary source to alternate source for providing continuous power supply.

Features:

- Automatic Transfer switch with inbuilt micro processor based AMF controller
- AC 33B Utilization Category and in coherence with IEC60947-6-1
- Source I & Source II protection against under/over voltage, under/over frequency, Single phase missing and optional overload tripping logic.
- External remote control logic by using PLC, ATS Controller or Genset Controller.
- Availability of over load tripping with inverse curve logic.
- Optional RS485 communication and cloud connectivity for IoT applications.
- Automatic start/stop operation of DG on mains failure.
- Fire alarm / external fault trip feature is provided.
- Inbuilt control switch for selecting auto/manual mode.
- High capacity to withstand short circuit.
- External indication terminal output for Source healthy and load ON. Inbuilt fuse protection to avoid failure of AMF controller.
- 3 Position isolation lock for Source I – Off – Source II.
- Optional Remote display for real time monitoring and controlling of both sources.
- **Model-R** is available with Incoming Terminal in bottom & Outgoing Terminal on top

Benefits:

- Smooth and high-speed load transfer in the event of power outage or disturbances in the power supply.
- Incorporated with Fire Alarm/External fault trip and plays a pivotal role in providing maximum immunity to the electrical system from fire risk/faults.
- Systematized with time delays (timers) to prolong the stability of power source during automatic switching of sources in the case of blackout or loss of power.
- Facilitates easy installation and ensures reliable performance.

Application:

- Airport and Railways
- IT Malls and Commercial buildings
- Automobile Industry
- Data Centre and Telecommunications
- Oil and Gas Industry
- Manufacturing Industry
- Healthcare
- Banking and Finance

Mechanical Specification:

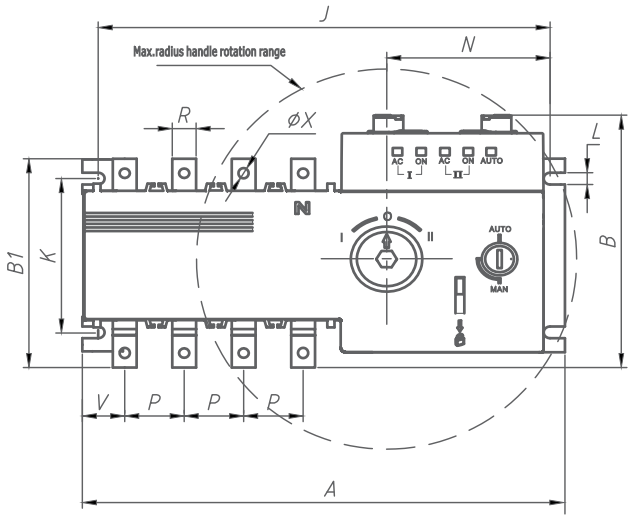

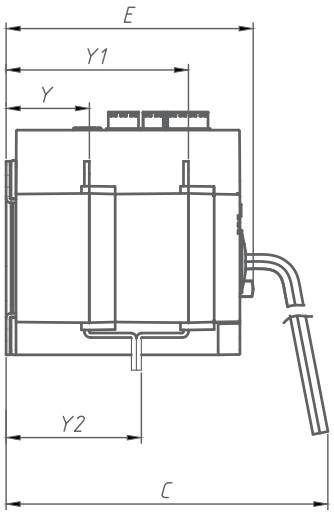

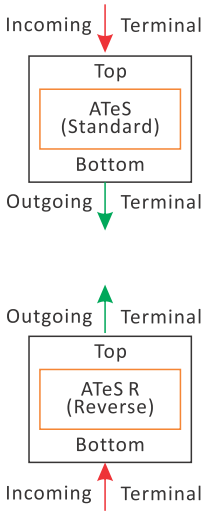

63/100/125A

Spec.	Outline Size (mm)					Mounting Size (mm)								
In	A	B	B1	C	E	J	K	L	N	P	R	V	ØX	ØY
125	230	135	125	165	112	132	85	6.5	83	30	12	21	6.5	41.5

160/200/250A

Spec.	Outline Size (mm)					Mounting Size (mm)								
In	A	B	B1	C	E	J	K	L	N	P	R	V	ØX	ØY
250	375	175	175	253	198	350	107	7.5	105	50	25	25	12	67

315/400/630A

Spec.	Outline Size (mm)					Mounting Size (mm)								
In	A	B	B1	C	E	J	K	L	N	P	R	V	ØX	ØY
630	430	240	260	295	245	415	180	10	100	67	40	45	12	135

800/1000/1200/1600A

Spec.	Outline Size (mm)					Mounting Size (mm)								
In	A	B	B1	C	E	J	K	L	N	P	R	V	ØX	ØY
1600	636	345	337	373	320	612	220	11	83.5	120	80	71	13	196

Technical Specification:

	63/100/125A	160/200/250A	315/400/630A	800/1000/1200/1600A
ELECTRICAL CHARACTERISTICS				
Current Rating	63/100/125A	160/200/250A	315/400/630A	800/100/1200/1600A
No. of Poles	4			
Rated Operating Voltage	415V			
Rated Insulation Voltage (Ui) V – Power Circuit	690V			
Rated Insulation Voltage (Ui) V – Control Circuit	500V			
Rated impulse withstand voltage (Uimp) - Power Circuit	8kV			
Rated impulse withstand voltage (Uimp) – Control Circuit	4kV			
Utilization Category	AC – 33B			
Rated control Power supply Voltage	230V/50Hz			
Rated short circuit withstand current (KA, Rms) Icw(0.1/1s)	9/5 kA	12/25 kA	50/25 kA	25/50 kA
Rated short circuit Making Capacity (KA, Peak) Icm	8 kA	17 kA	26 kA	55 kA
Rated Limit short circuit current (KA) Iq	120 kA			
Operating Cycle	10000	8000	6000	5000
Motor operating Voltage	220V AC / 50Hz			
Auxiliary DC voltage	12-24V DC			
Standard	IEC60947-6-1			
MEASUREMENT PARAMETERS				
Primary Source	Voltage, Frequency & Current (Optional)			
Secondary Source	Voltage, Frequency & Current (Optional)			
Measurements Monitored	Remote display via LCD			
Communication	(Optional) RS485 / Ethernet gateway			
PROGRAM CONFIGURATION				
Primary Source	Under Voltage(160-200V)/Over Voltage (240-290V) , Over Load with external CT, Under Frequency (40-48Hz) /Over Frequency (50-60Hz)			
Secondary Source	Under Voltage(150-200V) / Over Voltage (240-290V), Over Load with external CT, Under Frequency (40-48Hz) /Over Frequency (50-60Hz)			
Timers	Recovery delay (3 to 600s), Transfer delay(3 to 600s), Generator Start delay (3 to 600s), Generator stop delay(3 to 600s)			
Priority selection	Primary/Secondary source			
Overload	Source I (50-110%) and Source II (20-110%)			
Overload Cycles	3 Cycles			
Overload Recovery Time	0-99s			
Overload Delay Time	5-10s			
APPLICATIONS				
Transfer Between Main Power to Backup Power	Applicable			
Transfer between Backup Power to Main Power	Applicable			
MODE OF OPERATION				
Selection Mode	Auto/Manual/Remote/RS485			
Position order	I-OFF-II			
Functionality	On Load / Off Load			
Manual Emergency Operation	Available			
MECHANICAL CHARACTERISTIC				
Mounting	Position A			
Outline Dimension in mm	245X115X125	373X175X200	435X260X245	635x340x320
Weight in kg	5	10	20	60
GENERAL CHARACTERISTIC				
Ambient temperature	-20° to 55°C			
Air Humidity	Not more than 50% @ 40°C			
Altitude	Not more than 2000 m			
ELECTROMAGNETIC CHARACTERISTIC				
Class	Class B			
Radio Frequency Transmission Test	EN55011			
Radio Frequency radiation Transmission Test	EN55011			

SL

SMART BASIC METER

Ammeter | Voltmeter | VAF Meter | Power Meter

FOR COST EFFECTIVE AND EASY INSTALLATION WITH FULL PROGRAMMABILITY AT SITE!

Features:

- True RMS
- Average & phase wise information
- Measurement range 20mA to 6A
- Programmable primary / secondary for both Voltage & Current making wider range of operations – stocking becomes simple
- Universal Auxiliary input 40-300V AC/DC
- Built in power supply for SL V and 3V
- Auto-scrolling
- Auto-scaling of decimal point
- Low PT. CT burden
- Alerts for 120% Over Voltage, 80% Under Voltage & 100% Over Current in 3 row models
- Voltage & Current terminal on opposite side for safety and easy wiring

Additional Features:

- 4 Digits 1 row, 14 mm height bright red LED for 1 row
- 4 Digits 3 row, 14 mm height bright red LED for SL 1300/1330/1340/4300
- Patented alpha numeric display 4 Digits, 3 row, 14 mm height
- Simultaneous sampling of Volts & Amps
- Displays more than 13 basic parameters i.e, VLL, VLN, A, Hz
- RPM measurement for generator in SL 1300/4300
- W, VA, VAR, PF parameters available in SL 4300
- Voltage Indicating lamp and alarm indication in SL 1140

Mechanical Specification

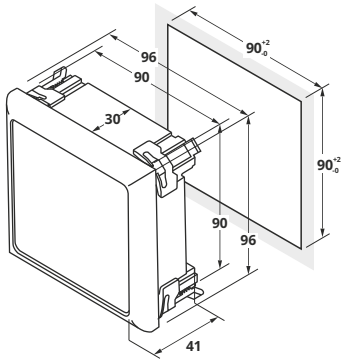

Parameters:

	SL A	SL V	SL 3A *	SL 3V *	SL 1140	SL 1330	SL 1340	SL 1300	SL 4300
INSTANTANEOUS									
V		✓		✓	✓		✓	✓	✓
V_1 V_2 V_3 V_{12} V_{23} V_{31}				✓	✓		✓	✓	✓
A	✓		✓			✓		✓	✓
A_1 A_2 A_3			✓			✓		✓	✓
Hz				✓	✓		✓	✓	✓
RPM								✓	✓
PF PF_1 PF_2 PF_3								✓	✓
W W_1 W_2 W_3									✓
VA VA_1 VA_2 VA_3									✓
VAR VAR_1 VAR_2 VAR_3									✓
OPTIONAL									
Class 0.5						✓	✓	✓	✓
Class 0.2						✓	✓	✓	
50A projection CT						✓		✓	
100, 200A hanging CT						✓		✓	
Tamper proof	✓	✓	✓	✓	✓	✓	✓	✓	✓
Indicator					✓				
Alarm Indication					✓	✓	✓	✓	

*Optional 0.8" display available for SL 3A & 3V. (MOQ applies)
SL ADC and VDC also available.

Technical Specification:

Specification	Description
Accuracy:	Class 1.0 (Default) Class 0.5 (Option). Frequency 0.5% default.
Sensing/ Measurement:	True RMS, 1 Sec. update time
Input Voltage:	4 Voltage inputs (V_1 V_2 V_3 V_N); (Range 80 to 550V LL) PT primary programmable upto 999kV Nominal 415V LL (415/415 in SL 4300) *Burden:* 0.2VA Max. per phase
Input Frequency:	45 - 65 Hz
Input Current:	Current inputs (A_1 A_2 A_3) 20mA - 6A (Field configurable 1A or 5A). Primary programmable up to 99kA (8000A in SL 4300) *Overload:* 10A max continuous, 50A max for 3 Sec *Burden:* 0.2VA Max, per phase.
Aux-Supply (control power):	180-300V AC (Self powered 3V and V meters) 40-300V AC / DC optional, 24V DC optional. *Burden:* 4 VA Max
Display resolution:	4 digits display with 14mm height
Weight:	Unpacked: 275 gms, Packed: 350 gms
Torque	1 N-m
Wire gauge	11 AWG

BM

BRANCH CIRCUIT MONITOR

Multi Channel Load Manager | Power Distribution Unit/System

COMPACT DEVICE TO ENROUTE MULTIPLE CHANNELS!

Features :

- Multi-channel data collection
- 3 Phase, 3 channels or Single phase 9 channels or 5610 with 6 channel 3 phase
- Pluggable up to 10 making 90 channel measurements
- Space saving 1cm per channel for 5130, 0.5cm for 5160
- Displays Basic, Power and Energy parameters
- Direct measurement upto 40A
- Optional Pluggable Ethernet (Default RS 485)
- Space saving compact design for easy installation into existing panel boards
- Direct Pass through upto 40A, 9 channel (3 channel 3 phase)
- No High voltage to product
- Pluggable version
- Installation of 10 sec per channels
- True RMS measurements
- Simultaneous sampling of Volts & Amps
- Accuracy class 1.0 as per IEC 62053-21, Class 0.5 as per IEC 62053-22.
- User programmable password protection
- Energy resetting @ 999999 KVAh × Transformer ratio
- Displays more than 25 parameters - Basic [VLL, VLn, A (Average & Phasewise), F], Power [W, PF, VA (Total & Phasewise)] and Energy [Wh, LH]
- Optional Ethernet with 14GB memory for IOT device

Note: *Customization can be done for other parameters provided volume justify*

Applications :

- For remote reading and control, the BM is supported by ELNet Software, designed for remote setup and data viewing and analysis
- Building Management System: With the open modbus protocol, the BM can interface any system, such as building management, HMI etc
- Compact : Ideal for Data Center
- Ideal for apartments / commercial complexes billing and load pattern study on individual phase
- Individual phase kWh measurement provides user flexibility of measuring 3 phase 3/6 channels or single phase 9/18 channels
- Primary current can be independently configured making it ideal for any kind of industry or upgradation

Note: *Additional error of 0.1% of full scale, for meter input current below 500mA for 5A setting*

Current Transformers :

Hang on CT- 5A or 50A or 100A or 200A

Up to 100A, 16mm ID

Clip on CT-5A | 50A | 100A | 250A

Split Core CT-100A | 400A | 1000A

Technical Specification:

Specification	Description
Accuracy:	Class 1.0 (Default) as per IEC 62053-21, Class 0.5 as per IEC 62053-22 (Optional).
Sensing/ Measurement:	1:600
Sensing/ Measurement:	True RMS, 1 Sec update time; 4 Quadrant Power & Energy
Input Voltage:	4 Voltage inputs (V_1 V_2 V_3 V_N) Programmable 110 or 415V LL Nominal (Range 80 to 550V LL) Primary Programmable up to 999 kV. *Burden:* 0.2VA Max. per phase.
Input Frequency:	45 - 65 Hz
Input Current:	Current inputs (A_1 A_2 A_3) **-** Each channel is independently configurable. Primary Programmable up to 99 kA. *CT output :* Can be upto 1000 mV or 100 mA from Split core CT or Hanging CTs - Manufacturing option.
Aux-Supply	80 - 300V AC **/** DC, 40-70Hz. *Burden:* 4VA Max.
Display resolution:	1 row 6 Digit for Integrated, 4 Digits for Instantaneous
CT PT Ratio Max:	2000 MVA Programmable.
Communication RS485 interface:	*Parity: Odd, Even, None (Prefered Even)* *Baud rate:* 4800 bps to 19200 bps. (Preferred 9600 bps). *Isolation:* 2000 volts AC isolation for 1 minute between communication and other circuits.
Weight:	*Unpacked:* 275 gms *Packed:* 350 gms (weight of CT excluded)

Schematic Diagram

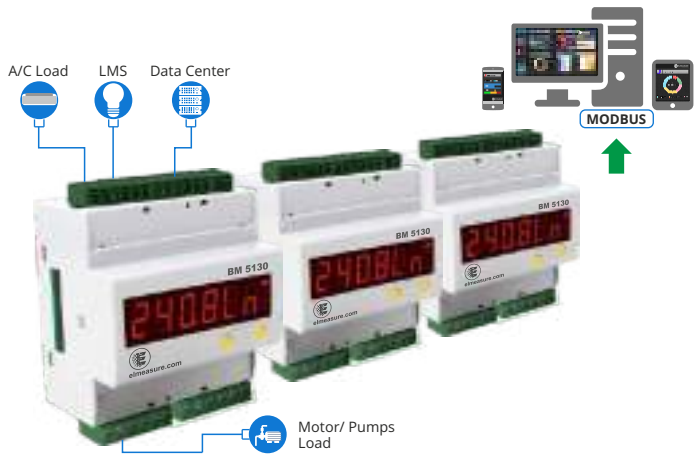

Mechanical Specification

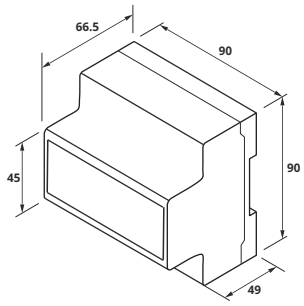

EN | PN

DEMAND CONTROLLER

Multifunction Meter | Demand Controller | Import Export | Harmonics | Power Quality | Digital/Analog Input or Output | Dual Source

HIGH-END MULTIFUNCTION METER FOR COMPREHENSIVE ENERGY MANAGEMENT!

Features :

- High / Low recording VLL, VLN, A, Hz, W, VA, PF, VAR value storage with time stamp.
- Accuracy class 1.0 as per IEC 62053-21, 0.5s option, Class 0.2s
- User programmable Password Protection.
- Measures THD and Individual harmonics up to 63rd order with a sampling rate of 512 samples / cycle.
- Captures and measures power quality events: K factor, Crest factor, Sag / Swell, Interruption and Unbalance in accordance with EN 50160.
- Display basic, power, energy, demand for both import and export parameters.
- Representation of waveforms for instantaneous V, I, Sag / Swell. voltage and current harmonics histogram.
- Records events such as Sag / Swell for voltage with the time stamp in 1s duration.
- CO_2, ON Hr, Power Interruptions.
- Max demand 4 high / 4 low, Flash 6MB, 12am snapshot, 31st day snapshot.
- Simultaneous sampling of voltage and current, programmable PT & CT ratio.
- Demand update every second to forecast kVA, kW & kVAR accurately.
- Clearance and Creepage distance meets UL- 61010.
- Programmable starting current in % of 5A secondary. Default 10mA
- Programmable Auto scrolling time - 1 sec. to 10 sec. (Default 5 sec.).
- Programmable Energy display - Counter based or Resolution based.
- Energy resetting at 9999999 kVAh x MF.
- Front LED pulse 16000 imp/kWh.
- OLD register to store previously cleared Energy & Load hours.
- Ampere hour (Ah) & PF average parameter.
- Phase wise Voltage Sag & Swell Wave Forms.
- LCD 8 parameter display at a time, 8 Digits energy.
- Power save mode with Enable/Disable option.
- Available RS485 communication & optional Ethernet communication (factory configurable).
- Byte order option - Field Programmable Float / Little Endian / Big Endian data format.

Mechanical Specification:

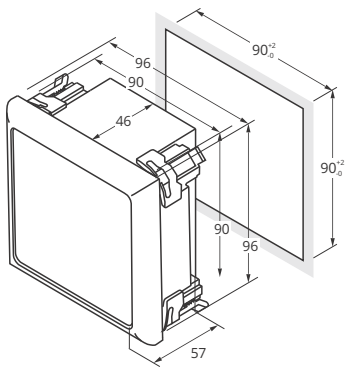

Optional Features EN :

- Digital outputs - 4 potential free contacts with programmable time delay. Hysteresis of 1%. Trip time delay: 1 to 180 sec.
  Output configurable to any of the parameters from VLL, A, F, W, PF, VA
- TOD option (Energy & Demand upto 8 slots).
- Pulse output 300/TR/KWh.
- Analog Input upto 2. Accuracy of class 1% FS.
- Digital Input upto 4
- Analog Output - Two independently programmable to 0-20 mA (or) 4-20 mA
- Individual Harmonics upto 63rd order.
- Demand Controller with 4 Relay outputs.
- RTC synchronisation through communication.
- Upto 60A or 100A direct measurements using Hanging CT.
- Datalogger - 6MB optional / Ethernet with 14GB memory for IOT device.
- Dual Source

Typical Applications

- Automatic connection or disconnection of DG connected to common bus .
- Keep equipment in safe region.
- Protection of equipment from Under/ Over Voltage or Current or Frequency.
- Process control.
- Protection of 3 phase equipment from Single phase prevention, Overload etc.

Multiplication factor for counter based energy mode

Full Scale in Watts : $\sqrt{3}$ × VPri x Apri /1000	0.4k to 4.0k	4.01k to 40k	40.1k to 400k	400.1k to 4000k	4M to 40 M	40 M to 400 M	400M to 4000M
Multiplication Factor:	0.01	0.1	1.0	10	100	1000	10000
Unit of display	kWh				MWh		GWh

Product Selection

	EN 8400	EN 8420	PN 8710	PN 8740
ACCURACY OPTION	Customised LED		Graphical LCD	
CLASS 1.0	■	■	■	■
CLASS 0.5S	□	□	□	□
CLASS 0.2S	□	□	□	
BASIC PARAMETERS				
V_{12} V_{23} V_{31}	■	■	■	■
V V_1 V_2 V_3	■	■	■	■
A A_1 A_2 A_3	■	■	■	■
Hz	■	■	■	■
Angle V/A RPM	■	■	■	■
POWER PARAMETERS				
Unbalance V & A	■	■	■	■
W W_1 W_2 W_3	■	■	■	■
VA VA_1 VA_2 VA_3	■	■	■	■
PF PF_1 PF_2 PF_3	■	■	■	■
VAR VAR_1 VAR_2 VAR_3 - Ind	■	■	■	■
VAR VAR_1 VAR_2 VAR_3 - Cap	■	■	■	■
POWER QUALITY PARAMETERS				
THD - V A Power	63rd ■	63rd ■	■	■
Ind. Harmonics	63rd □ *	63rd □ *	■	■
K Factor	■	■	■	■
Crest Factor			■	■
High Low	■	■	■	■
Sag & Swell			■	■
ON Hr	■	■	■	■
Power Interruptions	■	■	■	■
CO_2	■	■	■	■
% Load	■	■		
TEHD	□ *	□ *	■	■
TOHD	□ *	□ *	■	■
INTEGRATED PARAMETERS				
Wh	■	■	■	■
VAh	■	■	■	■
VARh-Ind	■	■	■	■
VARh-Cap	■	■	■	■
Load Hrs.	■	■	■	■
RD (IE)	■	■	■	■
Kwh Total	□ *	□ *	■	■
KVAh Total	□ *	□ *	■	■
KVARh Total	□ *	□ *	■	■
OLD Energy	■	■	■	■
OLD Load Hrs.	■	■	■	■
OLD RD Details	■	■	■	■
Volt Squared Hours	□ *	□ *	■	■
Amp Squared Hours	□ *	□ *	■	■
TOD PARAMETERS				
TOD Demand			■	■
TOD Energy			■	■
TOD RD (IE)			■	■
DEMAND PARAMETERS				
Sliding Demand	■	■	■	■
Block Demand	■	■	■	■
Rising Demand	■	■	■	■
Forecast Demand	■	■	■	■
Step Demand	■	■	■	■
Maximum Demand	■	■	■	■
Maximum Demand 4 high / 4 low			■	■
Cumulative MD Option	□	□	■	■
Additional Load	■	■	■	■
12am & 31st day snapshot	□	□	■	■
6 MB Data Logging	□	□	■	■
DUAL SOURCE				
Dual Source		■		
ADDITIONAL OPTIONAL FEATURES (ANY ONE)				
Ethernet +14 GB Data Logging	■	■	■	■
2DI	■	■	■	■
4 DI (WAGES)	■	■	■	■
1DO	■	■	■	■
2DO	■	■	■	■
2AI	■	■	■	■
2AO	■	■	■	■
2AI, 2DO	■	■	■	■
2DO, 2AO	■	■	■	■
4DO				■

□ Optional feature * Only through communication

Technical Specification:

	EN 8400	EN 8420	PN 8710	PN 8740
GENERAL CHARACTERISTICS				
Sensing / Measurement	True RMS, 1 Sec update time, 4 Quadrant Power & Energy			
Rated voltage	50-600 VLL			
Rated current	10mA - 6A			
Frequency	45 - 65Hz			
Poles description	1P + N, 3P, 3P + N			
Sampling rate	512 bits / cycle			
Measured Accuracy Class	Class 1 as per IEC 62053-21 / Class 0.5 / Class 0.2S as per IEC 62053-22 (Optional).			
Display type	LED 3 row		LCD 8 row	
Instantaneous Digits	4		4	
Integrated Digits	8		7	
Programmable Setting	110 or 415V LL Nominal & Primary Programmable up to 999 kV. Burden: 0.2VA Max. per phase			
Permissible overload	120%, Burden: 0.2VA per phase			
External Fuse Rating	200mA			
CT PT Ratio Max	2000MVA Programmable			
Auxiliary supply	80-300V AC / DC			
Power consumption	4VA nominal. 5VA for DMC			
Data update rate	1 Sec.			
COMMUNICATION				
Device ID & Parity	1 to 247 & Odd, Even, None (Prefered Even)			
Protocol & Interface	Modbus. RTU & RS 485			
Baud rate	9600 bps to 115200 bps (Preferred 9600 bps)			
Isolation	2000 volts AC isolation for 1 minute between communication & other circuits			
ENVIRONMENTAL CHARACTERISTICS				
Operating temperature	-10°C to + 55°C (14°F - 131°F)			
Storage temperature	-25°C to +70°C (-13°F - 158°F)			
Humidity	5% to 95% non-condensing			
Altitude	Below 2000mts			
Measurement Category	CAT III			
Pollution degree	2 (As per IEC 61010)			
PROTECTION CLASS				
Ingress protection	IP 51 (IP 54 front facia optional) & Double Insulation (As per IEC 61010-1)			
ELECTROMAGNETIC COMPATIBILITY				
Electrostatic discharge	IEC 61000-4-2g			
Immunity to Electromagnetic RF Fields	IEC 61000-4-3g			
Conducted Immunity	IEC 61000-4-6g			
Immunity to Magnetic Fields	IEC 61000-4-8g			
Immunity to voltage dips and interruptions	IEC 61000-4-11g			
Fast transient	IEC 61000-4-4g			
Immunity to surge waves	IEC 61000-4-5g			
Impulse voltage	CISPR- 22			
Conducted and radiated emissions				
SAFETY AND STANDARDS				
Construction	IEC/EN 61010-1 ed.3, CAT III, 300 V LN / 600 V LL , protective class II.			
Standards	UL 61010-1, IEC/EN 62052-11			
MECHANICAL CHARACTERISTICS				
Weight	Unpacked 350 gms. Packed 450 gms. (It may vary based on optional features)			
Dimensions	96x96 mm			
Torque	1 N-m			
Wire gauge	11 AWG			

iELR

EARTH LEAKAGE RELAY

Earth leakage current | Trip time

DETECT THE LEAKAGE CURRENT IN AN INTELLIGENT ELECTRICAL DEVICE!

Features :

- True RMS measurement.
- Clearance and creepage distance meets UL 61010 safety standard.
- Inverse curve - trip time is inversely proportional to fault current. This ELR is Intelligent, when the leakage current is 10 times higher than the set current, it trips 10 times faster.
- Field programmable trip current and trip time through front panel keys with password protection.
- Continuous leakage current display (Programmable) - Leakage current continuously displayed to enhance the user to understand the quality of Electrical network / Machine online. This can be disabled through setup if required.
- Continuous display of trip leakage current (Programmable) - In case of tripping, iELR captures and displays the tripped current with 4 Digits resolution, which helps the user to analyze and correct the problem. This can be disabled through setup if required.
- Continuous scrolling display for set current and set time.
- Manual test and reset keys.
- RS485 communication option.
- Auto Configuration through communication.
- Reset through communication in trip condition

Applications:

- Protects control panels and switch boards from flame leakage.
- Protects motors / transformers / feeders / generators etc., from earth leakage.
- Hazardous and sensitive industries like oil refineries / pulp industries / electrical distribution etc., can be protected.
- Complete protection for control engineering and mining industry.

Core Balance Current Transformer - CBCT

CBCT Specification
Input Range : 30mA to 3A Default (300mA to 8A, 30mA to 30A Optional)

Round Diameter: (Tape Wound) Inner Diameter 45mm, 60mm, 100mm, 150mm, 200mm, 250mm, 300mm	
Round Diameter: (Case mounted) Inner Diameter 38mm, 57mm, 92mm, 120mm, 210mm	Plastic Epoxy
Rectangular: (Tape Wound) 150×50mm, 250×100mm, 300×100mm, 350×100mm, 400×125mm, 400×200mm, 500×225mm, 500×200mm. (Any other sizes subject to availability)	

Advantages

- Microcontroller based design provides higher technological advantage
- Peak detection and value display helps in analysis and corrective action.
- Password protection for security against mishandling.
- Current sensitivity wider range 30mA - 30A and no limitations on set current.
- Programmable trip time 30ms - 30s with wider choice to suit different industry.
- Selection through soft keys (No DIP switches) provides better IP protection and longer life.
- Continuous earth leakage value display helps online loss analysis (Programmable).
- Intelligent tripping based on $T \propto 1/A$ gives faster and reliable protection.
- Auto scrolling of trip information and peak fault current provides better analysis.

Technical Specification:

	iELR 200D	iELR 300	iELR 400D
Input current:	30mA to 3A Default (300mA to 8A, 30mA to 30A Optional)		
Input Voltage:	NA	NA	50 - 550V LL
Trip Current:	Programmable		
Tripping time:	100 mS - 30 Sec		
Contact Rating:	2Amps @ 240V AC / 24V DC		
Accuracy:	Class 2.0FS		
Auxiliary supply:	80 - 300V AC/DC, 4VA Max		
CBCT:	Round , Rectangular		
Core Balance:	CT type : Tape wound limited round size option for epoxy coated and plastic version.		
Display:	4 Digit		
Mounting Type:	DIN rail	Panel Mount	DIN rail
Mechanical specification:	2 DIN: 90×36×67 mm	Panel Mount: 96×96×30 mm Cutout: 90^{+2}_{-0} x 90^{+2} mm	4DIN: 90×72×67mm
Communication RS485 interface: (Optional)	*Parity: Odd, Even, None (Prefered Even)* *Baud rate:* 4800 bps to 38400 bps. (Preferred 9600 bps). *Isolation:* 2000 volts AC isolation for 1 minute between communication and other circuits.		
Torque	1 N-m		
Wire gauge	11 AWG		

Trip Characteristics:

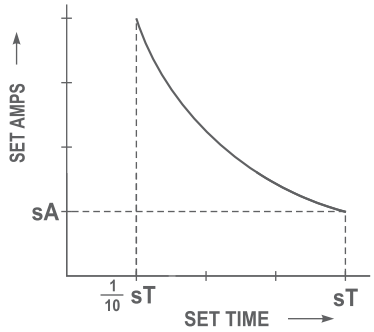

EPM | EPC

ENERGY & PROCESS MONITOR | CONTROL

Real-Time Monitoring | Improve Productivity

DEVICE TO MONITOR ENERGY & PROCESS TOGETHER!

Features :

- True RMS measurement.
- Simultaneous sampling of Volts & Amps.
- Energy display programmable-counter based or resolution based.
- Energy resetting at 999999 kVAh × MF for EPM and 99999999 kWh/kVAh for EPC.
- Positive energy accumulation even with CT polarity reversal, reverse lock programmable.
- User programmable password protection.
- Auto scrolling.
- Auto scaling of Kilo, Mega, Giga and Decimal point.
- Low PT, CT burden.
- Displays - Basic: VLL, VLN, A (Avg. & Phase wise), F; Power: W, PF, VA (Avg. & Phase wise); Energy: Wh or VAh programmable (any one), Load hrs, Max & Min (VLL and Amps), OLD Wh, OLD LH.
- Front LED pulse 10000 imp/kWh of secondary input for EPM and 16000 for EPC.
- Programmable PT, CT ratio upto 2000 MVA.
- Energy is programmable to Wh or VAh with 6 Digits resolution and 4 Digits resolution for instantaneous parameters.
- 80 to 300 V AC/DC Auxiliary supply.

Intelligent:

- Clearance and Creepage distance meets safety standard.
- Finger touch proof terminals to voltage and current connections.
- Parameter name and value displaying using 7 segment LED's.
- Field programmable Star (Wye) or Delta or Single phase configuration.

Mechanical Specification:

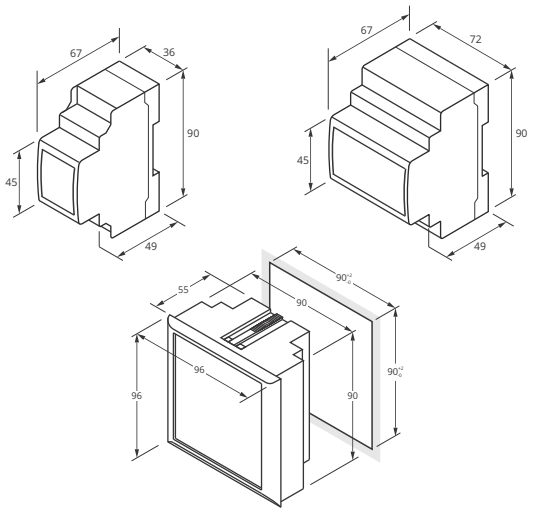

Additional Features: EPC 5110D

- High & Low measurements for Voltage and Current (Last one minute of data).
- Digital Input programmable for high frequency (72000 RPM) or low frequency (6RPM)
- Displays last one minute RPM. Cumulative RPM through RS 485.
- Optional: Digital Input (5-24V), Analog input (4–20 mA / 0–20 mA), Digital output (Relay, 2A) programmable up to 18 different parameters for each relay making as mini PLC.
- ON and OFF time for low-frequency input for the better understanding of breaks (avoid glitches).

PROCESS INTEGRATION:

Integration of process parameters such as temperature, flow, pressure, RPM, etc. giving greater flexibility to monitor them along with electrical parameters.

Technical Specification:

	EPM 5110	EPC 5110
Accuracy:	Class 1.0 (Default) as per IEC 62053-21, Class 0.5 as per IEC 62053-22 (Optional).	
Sensing/ Measurement:	True RMS, 1 Sec. update time. 4 Quadrant Power & Energy.	
Input Voltage:	4 Voltage inputs (V1 V2 V3 VN). Programmable 110 or 415V LL Nominal (Range 50 to 550V LL) Primary programmable upto 999 kV. *Burden*: 0.2VA Max. per phase.	
Input Frequency:	45 - 65 Hz	
Input Current:	Current inputs (A1 A2 A3) 50mA – 6A (Field configurable 1A or 5A). Primary programmable upto 99 kA. *Overload*: 10A max. continuous, 50A max. for 3 sec. *Burden*: 0.2VA Max. per phase.	
Aux-Supply (control power):	80 – 300V AC/DC, 40-70Hz. *Burden*: 5VA Max.	
Display resolution:	4 Digits for Instantaneous, Integrated: 6 Digits.	
CT Ratio:	2000 MVA programmable.	
Optional IO	3DI, 2AI	6DI, 2AI, 2DO or 8DI, 2AI (Lx0800)
Communication RS485 interface:	*Parity: Odd, Even, None (Prefered Even)* *Baud rate:* 4800 bps to 38400 bps. (Preferred 9600 bps). *Isolation:* 2000 volts AC isolation for 1 minute between communication and other circuits.	
Zigbee:	Optional	Optional
Mounting:	Panel	DIN rail
Weight:	Unpacked 300 gms. Packed 400 gms	
Torque	1 N-m	
Wire gauge	11 AWG	

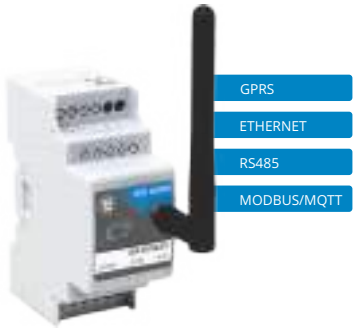

GW

GATEWAY

RS485 | ETHERNET | GPRS | RF

A MACHINE COMMUNICATION UNICORN TAILOR MADE FOR INDUSTRIAL IOT WORLD!

Features :

- Compact size.
- Built in RTC.
- Embedded web server for easy configuration and commissioning using a web browser.
- Modbus/MQTT protocol.
- DHCP / Static IP support
- Configurable RS485 baud rate, party and stop bits.
- Completely isolated in both RS485 and RJ45 side
- Optional storage Available.
- One touch recovery (Factory reset configuration)
- LED indication for easy setup and trouble Shooting.

Benefits:

- Gateway helps link non-internet sensor and devices to the internet so that data, configuration and controlling can be made possible online.
- Gateway can work as bridge between Zigbee and GPRS for low cost installation.

Applications:

- Energy management system
- Building management system
- Data centers, etc.

COMMUNICATION MODEL

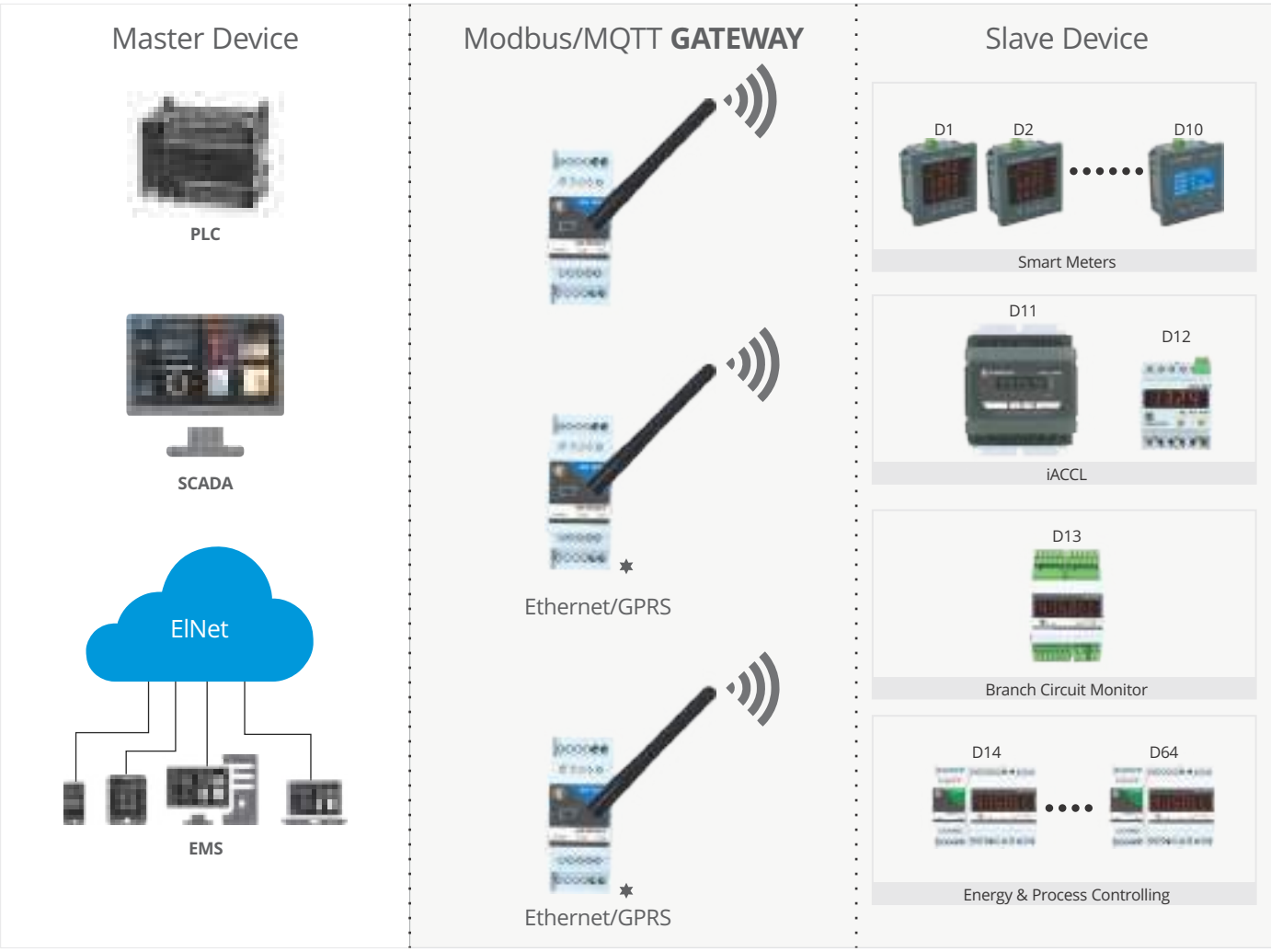

✱ Upto 64 device

Technical Specification:

	GW 1000 (Ethernet/GPRS)	GW 2000 (Ethernet/GPRS)
PROTOCOL		
	Modbus RTU	MQTT
ETHERNET PORT		
Connnector	8-pin RJ-45 socket for Cat 5 UTP	8-pin RJ-45 socket for Cat 5 UTP
Physical & Data Link Layer	IEEE 802.3i 10/100 BASE-T	IEEE 802.3i 10/100 BASE-T
Isolation	1.5 kV galvanic	1.5 kV galvanic
Max. cable length	100 m (328 ft)	100 m (328 ft)
Protocols	Modbus TCP Server/client, RTU Server/Client, HTTP.	Modebus RTU. TCP/IP, IPV4,MQTT, DHCP, UDP, HTTP, ARP, ICMP.
Concurrent connections	2Modbus/TCP slave, 8 HTTP web page	Windows: Maximum 1023 client
GPRS INTERFACE		
Anteena	5 dBi (Omni-Directional)	5 dBi (Omni-Directional)
Quadband	(850/900/1800/1900 MHz)	(850/900/1800/1900 MHz)
Connectivity	Internal module and SIM card socket	Internal module and SIM card socket
Compliant to GSM phase 2/2+	Class 4 (2 W @850/900 Mhz); Class 1 (1 W @ 1800/1900 Mhz) Code Schemes C2 1, 2, 3, 4	Class 4 (2 W @850/900 Mhz); Class 1 (1 W @ 1800/1900 Mhz) Code Schemes C2 1, 2, 3, 4
SERIAL PORT RS-485/RS-422 INTERFACE		
Connector	5.08mm 2-pin	5.08mm 2-pin
Physical layer	EIA-485-A, 2-wire	EIA-485-A, 2-wire
Isolation	15KV	15KV
Speed	2400, 4800, 9600, 19200, 38400, 57600, 115200 bps	2400, 4800, 9600, 19200 bps
Max. number of nodes	64	64
Protocols	Modbus RTU (master), Modbus TC P/IP (master)	Modbus RTU (master)
Serial Number	Virtual Com / TCP Server / TCP Client / Serial Tunnel	TCP Server / Serial Tunnel
USER INTERFACE		
LED Indicators	Power (RED), Ethernet link (green)	Power (RED), Ethernet link (green)
Monitoring & Configuration	Web browser based	Web browser based
High availability features	Watchdog supervision, brown-out detection	Support Watchdog, system never halt
POWER SUPPLY		
Connector	5.08mm 2-pin	5.08mm 2-pin
Voltage	4.5-6 V DC	4.5-6 V DC
Current	2A typical @ 5 V DC	2A typical @ 5 V DC
Intrinsic consumption	4W Eth/6W LGRS	4W Eth/6W LGRS
ELECTROMAGNETIC COMPATIBILITY		
Emissions (radiated and conducted	AS/NXS CISPR 22/En 55022 (Class A)	AS/NXS CISPR 22/En 55022 (Class A)
Immunity	EN 55024	EN 55024
Electrostatic discharge	EN 61000-4-2	EN 61000-4-2
Radiated RF	EN 61000-4-3	EN 61000-4-3
Fast Transients	EN 61000-4-4	EN 61000-4-4
Conducted RF	EN 61000-4-6	EN 61000-4-6
ENCLOSURE		
Material	Self-extinguising PC/ABS blend (UL 94-V0)	Self-extinguising PC/ABS blend (UL 94-V0)
Mounting	35mm DIN rail (EN 60715)	35mm DIN rail (EN 60715)
Classification/Type rating	IP 20/NEMA Type1	IP 20/NEMA Type1
Cooling	Conection	Conection
Environment		
Operating Temperature	0 to 60° C / 32 to 140° F	0 to 60° C / 32 to 140° F
Storage Temperature	-25 to 85° C / -13 to 185° F	-25 to 85° C / -13 to 185° F
Humidity rating	10 to 95% relative humidity, non condensing	10 to 95% relative humidity, non condensing
Operating Ambience	Free from corrosive gas, minimal dust	Free from corrosive gas, minimal dust
PHYSICAL		
Dimentions	36mm x 90mm x 67mm	36mm x 90mm x 67mm
Weight	100gms	100gms

iPFC

POWER FACTOR CONTROLLER

Current | Voltage | Frequency | PF | VAR | 6/8/12 stage control

INTELLIGENT DEVICE TO MAINTAIN THE POWER FACTOR IN REQUIRED RANGE!

Features :

- Three phase sensing with Three CT or single CT (Balanced Load)
- Intelligent Power Factor Controlling based on the capacitor bank switching history (Number of operations, ON time) improves the capacitor life time.
- 6 or 8 or 12 switching relay outputs.
- Automatic or manual control (manual control with power backup option).

  User programmable:
  - Star/Delta.
  - Lead and Lag limits.
  - PT and CT ratios.
  - CT secondary.
  - Minimum switch ON time (4-999 seconds) default 20s.
  - Minimum discharge time (4-999 seconds) default 50s.
  - Minimum capacitor on time (4-999 seconds) default 20s.
  - Minimum sensing current for controlling operation 100mA - 500mA.
  - User programmable capacitor value.
- Fault detection (Over compensation, Under compensation, Over voltage, Over current, Under voltage, Under current, Over harmonics for voltage and current).
- Displays VLL, VLN, Amps (Average and Phasewise) Frequency, W, PF, VAR (Total and Phasewise) Wh, PF Avg.
- Four quadrant operation.
- RS 485 communication interface (Optional).

Mechanical Specification:

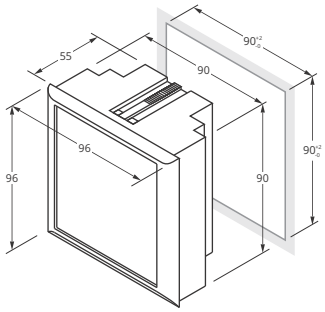

**Note: Depth will be 10 mm more based on the relay/connector accommodation.*

Advantages

- Three phase sensing gives accurate measurement of PF.
- Fault Detection (Over compensation, Under compensation, Over voltage, Over current, Under voltage, Under Current, Over harmonics for voltage and current).
- Automatic or Manual Control (manual control with power backup option).
- Increased capacitor life - capacitor switching based on history - ON time / number of switching.

Applications:

- In all Incomers.
- Fixed power factor corrections individual (e.g. motor, transformers, lighting, etc.)
- Group fixed power factor correction (several equipments connected in a group).
- Capacitor banks of tuned and detuned.
- Harmonic trap applications (e.g. UPS, Frequency Drives and Converters, etc.)

Technical Specification:

Specification	Description
Input current:	Current inputs (A_1 A_2 A_3) 50mA - 6A (Field configurable 1A or 5A). Primary Programmable up to 99 kA. Overload: 10A max continuous, 50A max for 3 Sec. Burden: 0.2VA Max. per phase.
Input voltage:	4 Voltage inputs (V_1 V_2 V_3 V_N) Programmable 110 or 415V LL Nominal (Range 80 to 550V LL) Primary Programmable up to 999 kV. Burden: 0.2VA Max. per phase.
Input Frequency:	45-65 Hz
Sensing/ Measurement:	True RMS, 1 Sec update time. 4 Quadrant Power & Energy.
Accuracy:	Class 1.0 (default) as per IEC 62053-21, Class 0.5 as per IEC 62053-22 (Optional).
Aux-Supply :	Control Power: 180 - 300V AC/DC, 40-70Hz. Burden: 10VA Max.
CT PT Ratio Max:	2000 MVA Programmable.
Relay contact rating:	SPST, 2A @ 240V.
Display Resolution:	1 row, 4 Digits for instantaneous and 6 Digits for integrated (10mm height).
Weight:	Unpacked: 350 gms, Packed: 450 gms.
Communication RS485 interface:	*Parity: Odd, Even, None (Prefered Even)* *Baud rate:* 4800 bps to 19200 bps. (Preferred 9600 bps). *Isolation:* 2000 volts AC isolation for 1 minute between communication and other circuits.
Torque	1 N-m
Wire gauge	11 AWG

Note: *Additional error of 0.1% of full scale, for meter input current below 500mA*

MPS

MOTOR PROTECTION SYSTEM

Voltage | Overload | Frequency | PF | Single phasing | Unbalance loading of voltage and current | Neutral current | Phase reversal.

ONE STOP SOLUTION FOR MOTOR PROTECTION!

Features :

- User programmable password protection.
- Auto-scaling of Kilo, Mega, Giga and decimal point.
- Auto scrolling.
- Finger touch proof terminals for voltage and current connections.
- Clearance & creepage distance meets UL 61010 safety standard.
- Communication with PCs, PLCs, DCS through optional RS 485/232 serial interface.
- Potential free output with programmable trip time for protection.
- Displays more than 25 parameters Basic (VLL, VLN, A, Hz); Power (W, VA, PF) and Energy (kWh, Load Hours).
- Displays the reasons for tripping for future correction.
- Programmable start time from sensing safe condition.
- Programmable locked rotor current and time.

Operational diagram

MPS 8000

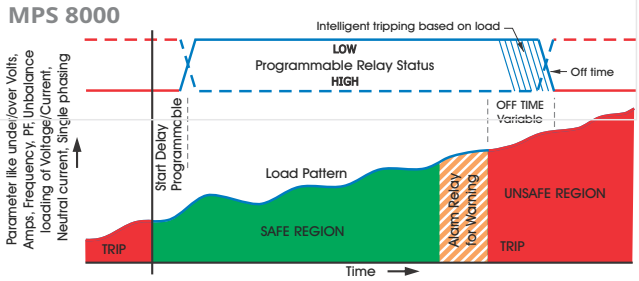

Mechanical Specification:

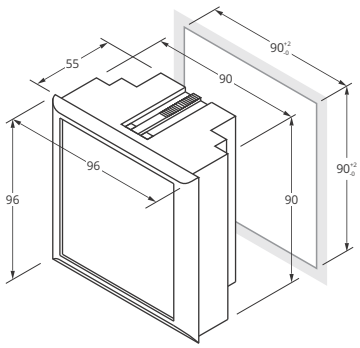

Additional Features for MPS 8000:

- Displays ON hours , Load hours & number of interruption.
- Simultaneous display of 7 parameters.
- Intelligent power save mode.
- Two field configurable parameter for continuous display.
- Continuous Wh display even in Auto-scrolling mode.
- Graphical display.
- Neutral current display and protection.
- Single solutions for protection of motors/equipment against voltage, overload, frequency, PF, single phasing, unbalance loading of voltage and current, neutral current, & phase reversal.
- Programmable (intelligent inverse time) trip time for Volts/Overload/Hz/PF/Neutral current.
- Programmable relay status High or Low for safe; 2 relays for alarm and trip. Detect winding shorts.
- Safe/Alarm/Trip indication for online view.
- Manual re-correction after the trip.

Technical Specification:

Specification	Description
Accuracy:	Class 1.0 (default) as per IEC 62053-21, Class 0.5 as per IEC 62053-22 (Optional).
Sensing/ Measurement:	True RMS, 1 Sec update time.
Input Voltage:	4 Voltage inputs (V_1 V_2 V_3 V_N)); Programmable 110 or 415V LL Nominal (Range 80-550V LL) Primary Programmable up to 999 kV *Burden*: 0.2VA Max. per phase.
Input Frequency:	45 - 65 Hz
Input Current:	Current inputs (A_1 A_2 A_3) 50mA - 6A (Field configurable 1A or 5A) Primary Programmable up to 99 kA *Overload*: 10A max continuous, 50A max for 3 sec. *Burden*: 0.2VA Max. per phase.
Aux-Supply:	(Control Power): 80 - 300V AC/DC.
Communication RS485 interface:	*Parity: Odd, Even, None (Prefered Even)* *Baud rate:* 4800 bps to 19200 bps. (Preferred 9600 bps). *Isolation:* 2000 volts AC isolation for 1 minute between communication and other circuits.
Weight:	*Unpacked*: 300 gms, *Packed*: 400 gms

LG

DIGITAL MULTIFUNCTION METER

Basic | Power | Energy | Dual Source Meter | Load Manager

SIMULTANEOUS MEASUREMENT OF VARIOUS ELECTRICAL PARAMETERS!

Features:

- Accuracy Class 1.0 (IEC 62053-21), 0.5s (IEC 62053-22) option
- Patented alpha numeric display with bar graph 14 mm height, 4 Digits 3 row for 64xx series,10mm for single row
- Available in LED 1 row 6 Digits, LCD 1 Row 7 Digits & LED 3 Row 4 Digits each
- Field programmable Star (Wye) or Delta or Single Phase configuration
- Programmable PT, CT ratio upto 2000 MVA
- Wide measurement range 1: 600 (10mA – 6A)
- Graphical representation of programmable load available for (A/W/VA)
- High sampling rate 128 samples/cycle simultaneous sampling of Volts & Amps
- High & Low measurements for Voltage and Current (Last one minute of data)
- Motor load efficiency can be monitored for 5 different programmable slots along with time for Watts/Current
- Non re-settable Over voltage Hour in diagnostic communication mode for healthiness of system
- Sliding demand for W, VA, VAR (LG 6400)
- Energy display programmable – counter based or resolution based
- Energy resetting at 9999999 kVAh x MF
- Individual phase energy through communication - helps branch monitoring, better load distribution study
- Front LED pulse 16000 imp/kWh of secondary input
- Communication with PCs, PLCs, DCS through optically isolated RS485 serial interface

  Finger touch proof terminals to voltage and current connections
- Dynamic Communication register map with the programmable address and user selectable parameter sequence
- CO_2 emission, ON Hrs, Power Interruptions

Mechanical Specification:

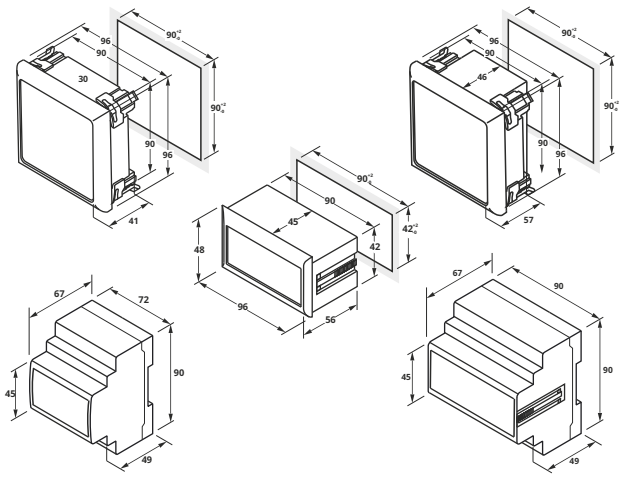

Parameters:

Parameters:	LG 1119 LG 2119	LG 3120 ★	LG 5110	LG 5120 ★ LG 2520	LG 2600	LG 6425 Any 2 groups	LG 6435 Any 3 groups	LG 6445 Any 4 groups	LG 6400
GROUP 1 *(BASIC)*									
V V_1 V_2 V_3 V_{12} V_{23} V_{31}	▣		✓	✓	✓	✓	✓	✓	✓
A A_1 A_2 A_3	●		✓	✓	✓	✓	✓	✓	✓
Hz			✓	✓	✓	✓	✓	✓	✓
RPM					✓	✓	✓	✓	✓
Phase angle V/A						✓	✓	✓	✓
Unbalance V/A						✓	✓	✓	✓
GROUP 2 *(POWER)*									
PF PF_1 PF_2 PF_3	⊡	✓	✓	✓	✓	✓	✓	✓	✓
W W_1 W_2 W_3	⊡	✓	✓	✓	✓	✓	✓	✓	✓
VA VA_1 VA_2 VA_3	⊡	✓	✓	✓	✓	✓	✓	✓	✓
GROUP 3 *(ENERGY)*									
Wh (Import)	⊡	●	●	●	✓	✓	✓	✓	✓
VAh (Import)	⊡	●	●	●	✓	✓	✓	✓	✓
Load Hours (Import)		✓	✓	✓	✓	✓	✓	✓	✓
ON Hours		✓	✓	✓	✓	✓	✓	✓	✓
Individual phase energy via communication only	✓	✓	✓	✓	✓	✓	✓	✓	✓
Number of interruptions					✓	✓	✓	✓	✓
CO_2					✓	✓	✓	✓	✓
GROUP 4 *(REACTIVE)*									
VAR, VAR_1 VAR_2 VAR_3					✓	✓	✓	✓	✓
kVARh inductive (Import)					✓	✓	✓	✓	✓
kVARh capacitive (Import)					✓	✓	✓	✓	✓
GROUP 5 *(ENERGY EXPORT)*									
Wh (Export)					✓	✓	✓	✓	✓
VAh (Export)					✓	✓	✓	✓	✓
Load Hours (Export)					✓	✓	✓	✓	✓
GROUP 6 *(REACTIVE EXPORT)*									
VAR VAR_1 VAR_2 VAR_3					✓	✓	✓	✓	✓
kVARh inductive (Export)					✓	✓	✓	✓	✓
kVARh capacitive (Export)					✓	✓	✓	✓	✓
GROUP 7 *(THD)*									
Voltage THD upto 15th order						✓	✓	✓	✓
Current THD upto 15th order						✓	✓	✓	✓
DEMAND									
Demand W VA VAR									✓
Max. Demand W VA VAR									✓
OPTIONAL									
Class 0.2S			✓	✓	✓	✓	✓	✓	✓
Class 0.5S	✓	✓	✓	✓	✓	✓	✓	✓	✓
RS 485	✓	✓	✓	✓	Built In				
*50A projection CT (MOQ)	✓	✓	✓	✓	✓	✓	✓	✓	✓
*100A / 200A hanging CT (MOQ)	✓	✓	✓	✓	✓	✓	✓	✓	✓
DINrail - 4Din (LED)	✓	✓	✓	✓					
DINrail - 5Din (LCD)	✓			✓	✓				
µG (96x48mm, LED)	✓		✓						
DINrail - 80A Direct Current (LED)			✓	✓					
*IoT Add on with 14GB Memory					✓	✓	✓	✓	✓

● Programmable to either Wh or VAh. ⊡ Any one parameter for 1119
* Restricted additional option ★ Dual Source

Multiplication factor for counter based energy mode

Full Scale in Watts : $\sqrt{3}$ × VPri x Apri /1000	0.4k to 4.0k	4.01k to 40k	40.1k to 400k	400.1k to 4000k	4M to 40 M	40 M to 400 M	400M to 4000M
Multiplication Factor:	0.01	0.1	1.0	10	100	1000	10000
Unit of display	kWh				MWh		GWh

Technical Specification:

	LG 1000/3000/5000 Series	LG 2000 Series	LG 6000 Series
GENERAL CHARACTERISTICS			
Display type	LED 1 row	LCD 1 row	LED 3 row
Integrated Digits	6	7	8
Instantaneous Digits	4		
Sensing / Measurement	True RMS, 1 Sec update time, 4 Quadrant Power & Energy		
Rated voltage	50-600 VLL		
Rated current	10mA-6A		
Frequency	45-65 Hz		
Poles description	1P + N, 3P, 3P + N		
Sampling rate	128 samples/cycle		
Measured Accuracy Class	Class 1 default / Class 0.5S / Class 0.2 as per IEC 62053-22 (Optional).		
Programmable Setting	110 or 415V LL Nominal & Primary Programmable up to 999 kV. Burden: 0.2VA Max. per phase		
Permissible overload	120%, Burden:0.2VA per phase		
External Fuse Rating	200mA slow blow		
CT PT Ratio Max	2000 MVA Programmable		
Auxiliary supply	80-300 V AC/DC (40 - 300V AC/DC Optional)		
Power consumption	4VA		
Data update rate	1sec		
COMMUNICATION			
Device ID & Parity	1 to 247 & Odd, Even, None (Preferred Even)		
Protocol & Interface	Modbus. RTU & RS 485		
Baud rate	2400 bps to 38.4k bps (Preferred 9600)		
Isolation	2000 volts AC isolation for 1 minute between communication and other circuits		
ENVIRONMENTAL CHARACTERISTICS			
Operating temperature	-10°C to + 55°C (14°F - 131°F)		
Storage temperature	-25°C to +70°C (-13°F - 158°F)		
Humidity	5% to 95% non-condensing		
Altitude	Below 2000 mts		
Measurement Category	CAT III		
Pollution degree	2 (As per IEC 61010)		
PROTECTION CLASS			
Ingress protection	IP 51 (IP 54 front facia optional) & Double Insulation (As per IEC 61010-1)		
ELECTROMAGNETIC COMPATIBILITY			
Electrostatic discharge	IEC 61000-4-2		
Immunity to Electromagnetic RF Fields	IEC 61000-4-3		
Conducted Immunity	IEC 61000-4-6		
Immunity to Magnetic Fields	IEC 61000-4-8		
Immunity to voltage dips and interruptions	IEC 61000-4-11		
Fast transient	IEC 61000-4-4		
Immunity to surge waves	IEC 61000-4-5		
Conducted and Radiated emissions	CISPR- 22		
SAFETY AND STANDARDS			
Construction	IEC/EN 61010-1 edition 3, CAT III, 300 V LN / 600 V LL , Protection class II.		
Standards	UL 61010-1, IEC/EN 62052-11		
Mechanical characteristics			
Weight	Unpacked: 275 gms, Packed: 350 gms		
Torque at terminals	1 N-m		
Wire Gauge at terminals	11 AWG		

iD - LOG

PORTABLE POWER ANALYSER CUM DATA LOGGER

USER FRIENDLY | DYNAMIC COMMUNICATION | DEMAND MONITORING

High Profile Portable Power Analyzer with Higher Accuracy and Data logging

ELMEASURE®
Possibilities...Infinite

iD LOGGER

Portable Power Analyser with Dynamic Communication, Higher Accuracy and Data Logging

Kit - 1 **iD LOG - Ethernet**
4GB data logger (default)
Option for current measurement using Clip CT (default) or Rogowski

Kit - 2 **iD LOG - Ethernet & GPRS**
14GB data logger (default)

Features

- Helps you to locate, predict, prevent and troubleshoot problems in power distribution.
- Measures voltage, current, frequency, power, energy consumption, unbalance, harmonics and inter-harmonics.
- 24x7 Cloud Server Data logging with Time stamp
- Monitor and Control large campuses or remote facilities with inexpensive web technology
- Perform audits and analyses remotely.

Benefits

- Maximum Return on Investments
- Reduce Energy Costs
- Improve Working Environment
- Identification and elimination of energy waste
- Security and System Integration
- Various Protocol Supported
- Economically priced
- High Performance and Easy configuration

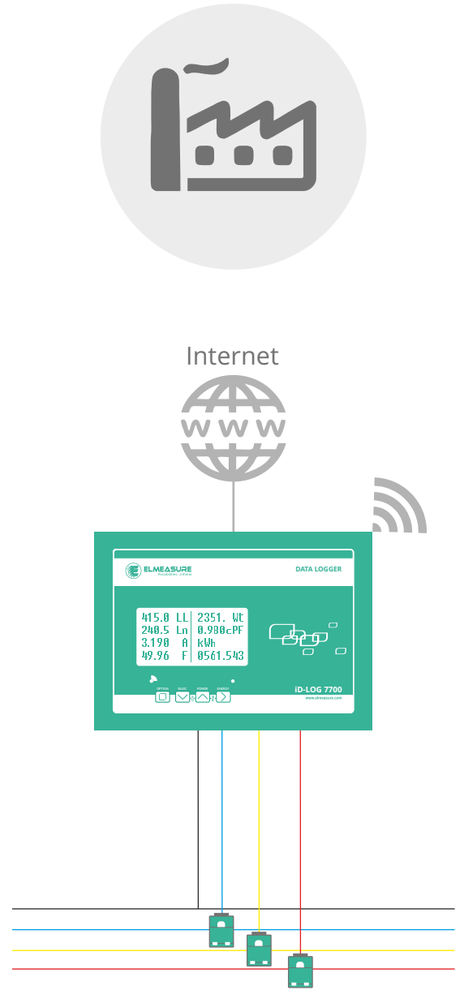

ElNet

Energy Management Software

The Software collects data from the plant consolidating it into manageable information to constantly monitor energy usage and identify the core areas for corrective action, ensuring optimum performance.

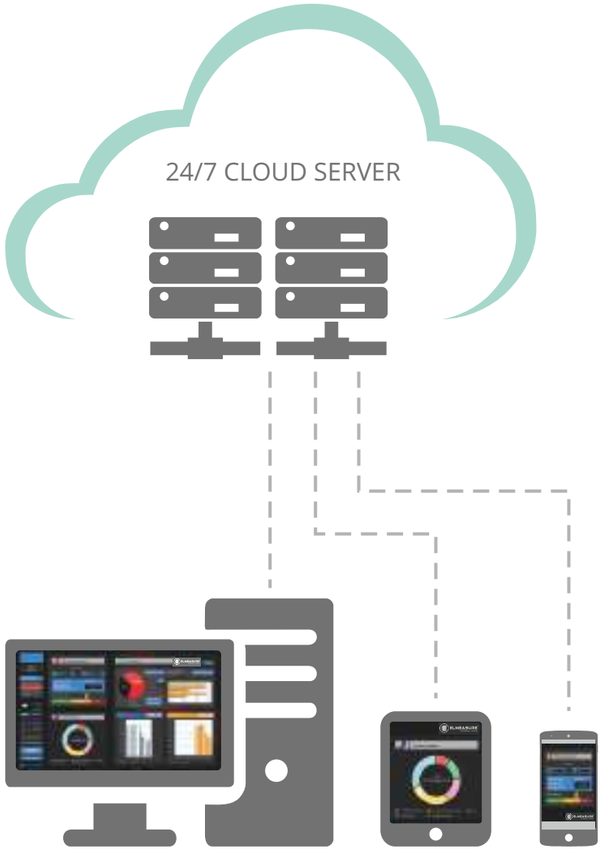

Web based technology

- User friendly
- Enhanced security
- Vector based graphics
- Remote monitor and control equipment processes and facilities with in-expensive web browsers
- Report on operational status of equipment, process and facilities
- Reduce billing cycles by obtaining accounting information directly from automation systems
- Reduce service calls and manpower by using remote diagnostics.
- Use low cost secure connections to network over a combination if ISP, Intranet, Internet and dial-up connections

Analyzing and Reporting

A variety of reports can be availed by activity, schedule and types by specific list:

- Data Quality
- Exception Reports
- Alarm Handling Packages
- Display Groups
- Historical Data Trending
- Real time Trending
- Dashboard
- Matrix

Reports can be viable and downloaded by any format provided and schedules can be modified based on convenient time. *Schedulers will automatically run according to our initial configuration

Applications

- Frontline troubleshooting
- Predictive maintenance
- Quality of service compliance
- Long-term analysis
- Load studies
- Energy assessments

Portability

- Compact Size
- Modular Construction
- LCD Screen
- Inbuilt GPRS Communication

Datalog

- Trends - Single and multiple days Min, Max & Avg.
- Table view - Single and multiple days Data Export to Excel
- Alarm, Min & Max.

Email/SMS

- Day Log book, Hourly-day Energy, Shift Energy, TOD energy, Min max, Flexible energy report and for abnormal Alarm conditions
- SMS to the mobile for the following: abnormal Alarm conditions, Hourly and Daily Energy
- Customization is possible for any kind of Email/SMS options

Features	Parameters
Basic	
Line to Neutral Voltage	VLN Avg,VR-N,VY-N,VB-N
Line to Line Voltage	VLL Avg,VR-Y,VY-B,VB-R
Line Current	AR, AY, AB, A-avg
Neutral Current Computed	AN
Frequency, RPM (Generator application)	Hz, RPM
V & A Phase Angle	VR, VY, VB, AR, AY, AB
Unbalance V & A	% V, % A, VR, VY, VB, AR, AY, AB
Power	
Active Power	W Total, WR, WY, WB
Apparent Power	VA Total, VAR, VAY, VAB
Reactive Power	VAR Total, VAR R, VAR Y, VAR B
Power Factor	PF Avg, PFR, PFY, PFB
Energy / Integrated	
Active Energy	Wh
Apparent Energy	VAh
Reactive Energy	VARh-Ind, VARh-Cap
Load Hrs, No. of Interruption, Life Timer	LH, Intr, On.Hr Ah, PF Avg
Old (Energy, Load Hrs)	Old (Wh, VAh, VARh Ind/Cap, LH)
Harmonics	
Voltage THD	THD% VR, VY, VB
Current THD	THD% AR, AY, AB
K Factor	K Factor: VR, VY, VB, AR, AY, AB
Individual Harmonics	Upto 31st (V & A)
Events (High/Low)/ With time stamp	
Voltage VLL, VLN High/Low	VLL, VLN
Current High/Low	A
Frequency High/Low	Hz
VA High/Low	VA
W High/Low	W
VAR High/Low	VAR
Power Factor High/Low	PF
Demand	*Programmable to any one of the below*
Active Power (W)	Watt } Programmable sliding/ fixed window, block demand period, forcast/ step demand control
Apparent Power (VA)	VA
Reactive Power (VAR)	VAR
Current Average (A.Avg)	A Avg

Technical Specification:

Specification	Description
Accuracy:	Class 1 (Default) IEC 62053-21, Class 0.2 with specific CT.
Sensing/ Measurement:	True RMS, 1 Sec update time.4 Quadrant Power & Energy
Input voltage:	4 Voltage inputs (VR, VY, VB, VN) Programmable 110 or 415V LL Nominal (Range 80 to 520 VLL) Primary Programmable up to 999 kV. *Burden*: 0.2VA Max. per phase.
Input frequency:	45 Hz to 65 Hz
Input current:	Current inputs (333mV) Primary Programmable up to 99 kA. *Burden*: 0.2VA Max. per phase.
Aux-Supply:	Built-in
Display Type:	6mm height bright LCD graphical display.
Display Resolution:	7 digits.
CT PT Ratio Max:	2000 MVA Programmable.
Communication:	GPRS / Ethernet

CT Specification

Suitable to measure current from mA to hundreds of kA.
High linearity | Wide range | Non-intrusive, no power drawn from the main.
Very useful with large size or awkward shaped conductors or in places with limited access.
No danger from open-circuited secondary | Not damaged by large overloads.

Clip CT

333 mV
Input current 250A

Rogowski coil

Rated Current: 100A ~ 100 kA
Output: 0.333V or 100mV per 1000A
Diameter: 24 cm, 36 cm
Lead wire: 1.5 m length
Isolation voltage: 3500V
Temperature range: -25°C + 70°C
Response bandwidth: 1Hz ~ 1MHz

Range of Products: Building Energy Management System (BEMS) | EMS | Demand Controller | Multifunction Meters | Electronic Energy Meters | Dual Energy Meter | Digital Panel Meters | Automatic Changeover with Current Limiter (ACCL) |Power Factor Controller (PFC) | Earth Leakage Relay (ELR) | Earth Fault Relay (EFR) | Gateway | Branch Monitoring Unit | Smart Input Output | Transducers | Converters

ELMEASURE®
Possibilities...Infinite

ELMEASURE®
Possibilities...Infinite

PORTABLE
POWER QUALITY ANALYZER
iD-LOG 8000

"In-depth Power Quality Analysis for abnormalities and disturbances."

- 0.25% High Accuracy
- Compliance to EN 50160
- >24 hrs Endurance
- 5 CT Inputs 5mA-10,000A AC

iD-LOG 8000

POWER QUALITY ANALYZER

The smartest way to approach the raising Power Quality issues is to address the situation quickly with accurate data.

iD-LOG 8000, an ultra light weight power quality analyzer with high accuracy help troubleshoot all your power quality problems in three and single-phase power distribution systems.

Allows users to:

- identify the origin of abnormalities or disturbances within a system
- measure inrush current of electrical engines and equipment
- identify low quality power which may bring about a production standstill, and affect or reduce the life cycle of equipment and systems
- check if the new systems are commissioned correctly
- identify and eliminate load peaks and excess demand to reduce power consumption
- prevent overheating and lack of insulation due to high harmonics content
- monitor loads, consumption and related costs for power and energy audit
- check and assess the performance of UPS, with AC/DC measurements
- measure signals that includes asymmetrical signals for PWM controls on inverters

Salient Features

1. High accuracy of 0.25% and 0.5% on kW for continuous voltage and current measurement.
2. Equipped with 5 current input and 4 voltage measuring channels.
3. Starting (inrush) current and transient are captured, monitored and recorded.
4. Harmonic analysis up to 50th order with Real-time waveform in 128x128 graphical display.
5. Occurrence Counter and Time for Sag & Swell.
6. Wide range of measurements 5mA-10,000A AC, 50mA-5,000A DC and 40-65Hz, 400Hz.
7. In coherence with the power quality standard EN 50160 .
8. Set power measurement during 4 time periods (tariffs).

"An innovative product that can be easily mounted on panels with the help of **Magnetic latch**"

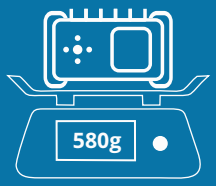

Ultra Lightweight

EN 50160

- Evaluates the power quality of the system based on the type of installation, production, connected instrument and is the Reference Standard for power quality
- Displays the outcome of the EN 50160 compliance test in accordance with the selected parameters

Unbalance

- Unbalance is evaluated using the method of symmetrical components according to EN50160
- Displays voltage and current unbalance rate on 3 phase wiring

Transients

- Captures overvoltage and overcurrent transients >150µs with RMS continuous sampling every 2 periods
- Captures transient waveform triggered on signal mode and auto mode

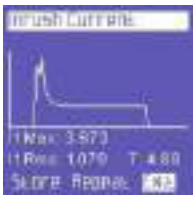

Inrush currents

- Detects Inrush currents >150µs. and is measured over a period of 1, 2, 5, 10 seconds
- Automatically displays the waveform, maximum value, RMS value and duration of Inrush currents occurred

Harmonic

- Harmonic histogram of the voltage and current is displayed
- Calculates Total Harmonic Distortion (THD%), Total Demand Distortion (TDD%) and Harmonics upto 50th order
- K factor of the phases are recorded and displayed

Power factor

- Displays the cos of the 3 phases with the relevant angles expressed in degrees with an accuracy of ±0.5°

Waveforms

- Available for Instantaneous Transient mode and Inrush Mode
- Captures all waveforms simultaneously
- The L1, L2 & L3 voltage and current waveforms and relevant RMS values is measured, viewed and can be analyzed using software

Energy Counters

- Password protection provided for Absorbed and produced power counters (kWh, kVA, kVAr)
- Displays Average power and PF calculated on the basis of the integration time set.
- Displays the absorbed (kWh, kVArh) and generated power (kWh, kVArh), and the related costs for various time bands

Auto detection

- Supports automatic clamp detection to set the thresholds
- Identifies if one or more probes of the phases 1, 2 or 3 is missing or different from the others in three-phase connection

Survey/Recordings

- Allows to set a measurement campaign and view the data stored on the uSD card
- Measures and records up to 62 parameters simultaneously on all 4 phases, such that more than 1000 parameters can be available in 4 GB memory card
- The data storage rate is available in 1", 5", 30", 1', 5' and 15'

Alarm Log

- Stores and displays 5 alarms
- Each alarm is identified by: Start Date and Time
- Type of parameter that exceeded the thresholds set value and caused the alarm to go off

Tariff Bands

- Resets the measurements previously performed (for all 4 tariffs) with available options of Never - 1 Month- 2 Month - 3 Month
- Tariff band set based on start time and end time (with 15 minute intervals)
- The cost of the kWh consumed and generated will be measured

Product Features

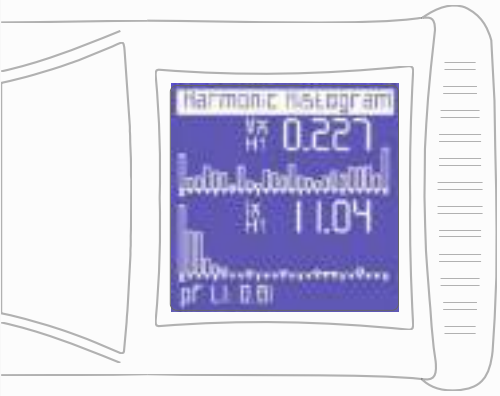

- Large 128x128 pixels backlit graphical LCD for high ductility display with multilingual menus, waveforms, histograms, drawings, etc
- Ultra lightweight (580g) handheld product with compact design
- In coherence with IP 30 IEC 61010-1 (Safety Standard)

- Colour coded rings
- 10 double-function membrane keypad for easier scrolling of menus to access different functions
- One-Touch START/STOP Key for quick recording

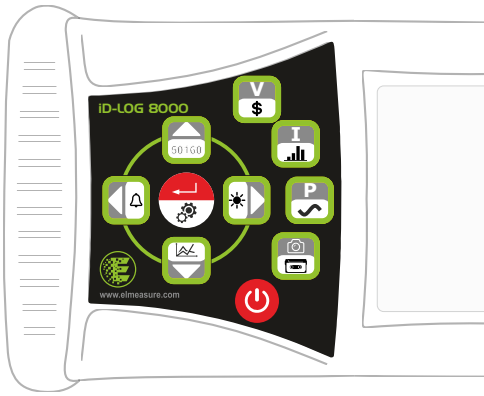

- 24 hours High capacity rechargeable battery pack (2100mAh) ensures uninterrupted operation of the device
- Magnetic latch and tilt stand is provided for mounting on panels

- Supports screen orientations in portrait and landscape mode
- 4 GB external memory card storage support for extended campaigns
- Real-time communication with PC via USB port

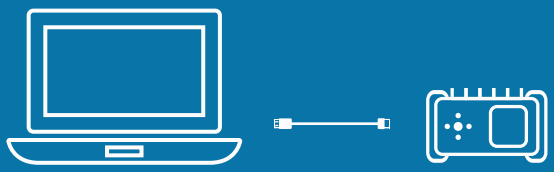

ELNET POWER STUDIO

"A user-friendly software to access & analyze the recorded data without any installation"

Features

- A user friendly software for data archiving and analyzing recorded data without any installation
- Elnet Power Studio simultaneously captures and records data of all electrical parameters
- Enables smart analysis of audit data, data archiving and real time analysis of electrical parameters
- Presentation of data in the form of tables, phasor diagrams, and waveforms
- Reconstruct waveforms, energy data and events observed during a measurement campaign
- Display of records comprising measured RMS values in chronological order
- Display configuration to provide maximum flexibility while reading and for interpretation of the recorded data
- A range of campaign reports can be generated and exported in slv format

Measuring Campaigns

Memorizes the informations to characterize presence of electrical phenomena ocurred

Measure RMS

RMS measured and displayed for , both three-phase of the individual phases, such as voltages (V), current (I), Phase angle, frequency (f)

Measure THD

The total factor of harmonic distortion percentage (Total Harmonic Distortion Factor = THD%) of voltage and current signals are measured

Transient

The transients are analyzed based on the threshold settings provided for the capture of electrical phenomena

Capturing Inrush Current

This survey will display the load absorption at start-up. The graph of the inrush current for the 4 channels i.e. I1 (or Iaux), I2, I3, and In will be displayed.

Harmonic Spectra

The percentage value of the harmonic component and the number of harmonic order with its equivalent frequency are displayed

Events

The user will be able to analyse all the events recorded in the form of Event List, Event Table and Event Graph.

Plotting a Set of Measurements

The relevant graphs of the selected measurements will be displayed in oscilloscope-type quadrants. The recording time of the first and last record will be displayed

Records

The chronological order of records containing all measured RMS fields are displayed

Trends

The trend overtime can be presented for the measured RMS

Customizing Views

ELNET POWER STUDIO allows the user to carry out any checks or ad hoc reports. Users can customize colours of the oscillogram

Generating and Exporting Campaign Report

Fully automated report which will open a form where you can enter a series of data to identify the campaign

Vector Display

The basic values of the voltages between phase & neutral, and the currents in magnitude & phase can be represented

Window Layout

ELNET POWER STUDIO allows to store up to 2 desktop configurations depending on the type of analysis

Waveform Display

A detailed view of all the waveforms for voltage and current inputs in different combinations can be observed

Printing via Printer

The program allows you to print the current screen and graphs directly to the printer

Real-time Data Analysis

Transients

Trend

Phasor

V & I

Data Log

System Requirements

OS	Windows 7 and above
Memory	40 MB or more
Communication Port	USB 3.0 driver
Others	CD-ROM drive (optional)

Data Sheet

Input characteristics		
Voltage inputs		
Number of inputs	6 [3 Phase L1,L2,L3 + N) and 1 Phase (L+N)]	
Maximum input voltage	1000V (Phase to Phase) and 600V (Phase to Neutral)	
Nominal voltage range(P-N)	50V to 300V	
Current inputs		
Number of inputs	5 [3 Phase (A1,A2,A3 +An) DC-coupled and 1 Phase (A)]	
Type	Clamp on CT and Flexi CT with Voltage output	
Range	0.1A- 6000A AC and 0.5A-6000A DC (optional CT's)	
Display modes		
Waveform display	Available for Instantaneous Transient mode and Inrush Mode	
	Captures all waveforms simultaneously	
Phasor	Shows real time phasor diagram	
	Available in Normal and Unbalance mode	
	Display update rate 5x per second (200ms/sample)	
Meter reading	V, I, P, Q, S, F, PF, THD(V)%, THD(I)%, cos, peaks, minimums,maximums, averages, max. demands, etc.	
Bar Graph	Available in Harmonics and Histogram representations	
Eventlist	Available in Dips and Swells, Logger and Monitor mode	
Trend Graph	Automatically records min, max and average values over time for all readings being displayed for the 3 phase and neutral simultaneously	
Measurement Modes		
Basic Power and Energy	V, I, P, Q, S, F, PF, THD(V)%, THD(I)%, cos, peaks, minimums,maximums, averages, max. demands, etc.	
Dips and swells	Captures up to 20 events	
Harmonics dc, 1 to 50	Harmonic Volts, THD Volt, Harmonic Amps, THD Amps, K Amps upto 50 in the form of Histogram	
Unbalance	Available	
Transients	overvoltage and overcurrent	
Inrush currents	Inrush Current, Inrush duration, Arms	
Mains signaling	Instantaneous voltage signaling and average voltage signaling	
Logger	Logger Measures and records up to 62 parameters simultaneously on all 4 phases such that more than 1000 parameters can be available in 4 GB memory card	
Accuracy, and Range		
	Measurement Range	Accuracy
Volt/Amps/Hertz		
Voltage (Vrms)	Scale 1	±0.25% + 0.1%FS @ RMS V < 350VAC
	Scale 2	±0.25% + 0.05%FS @ RMS V > 350VAC
Current (Arms)	Scale 1	±0.25% + 0.1%FS @ RMS I < 5% IN Default Flexi CT
	Scale 2	±0.25% + 0.05%FS @ 5% < RMS I < 20% IN Default Flexi CT

	Scale 3	±0.25% + 0.05%FS @ 20% < RMS I < 50% IN Default Flexi CT
	Scale 4	±0.25% + 0.05%FS
Frequency (Hz)		±0.01 Hz (40-70Hz)
Power and energy		
Active power count (kW)	Full Scale (FS)	Class 0.5
Reactive power count (kVar)	Full Scale (FS)	Class 1
Power Factor (PF)	Full Scale (FS)	±0.5°
Trend Recording Method		
Volts/Amps/Hertz, Harmonics, Power Unbalance and Mains Signaling mode		
Sampling	128 samples per cycle (adaptive in 40Hz - 70Hz range), 16 samples per cycle at 400HZ	
Recording time	1 s	
Memory	64 KB	
Duration	User selectable: 1”, 5”, 30”, 1’, 5’, 15’	
Resolution	User defined	
Cogeneration	Available	
Waveforms	V & I	
Harmonics	Values and histograms up to the 50th order	
Wiring configurations		
3PH+N-BL	balanced three-phase system with neutral	
3PH-BL	balanced three-phase system without neutral	
3PH	unbalanced three-phase system without neutral	
3PH+N	unbalanced three-phase system with neutral	
2 PH	two-phase system	
1 PH	single-phase system	
General specifications		
Warranty	1Year	
Case		
Mounting	Magnetic latch, Stand	
Material	ABS with self-extinguishing V0 grade	
Protection class	IP30	
Drip and dust proof	According to IEC 60529	
Shock and vibration	IEC 60068-2-27 and IEC 60068-2-6	
Display		
Type	FSTN Negative dot matrix graphic LCD	
Size	68*68 mm	
Resolution	128x128 pixels	
Contrast and brightness	Adjustable	
Mechanical		
Length	116mm	
width	203mm	
Depth	53mm	

Weight	580 g
Power	
Line power	input 100-240VAC ±10% 47-63Hz with interchangeable plug
Power adapter output voltage	7.5VDC - 12W
Battery power	4xAA NiMh 2100mAh
Battery operating time	>24 Hrs
Battery charging time	Approx. 4 hrs
Power saving	Enabled
Standards	
Power quality	EN 50160
Harmonics	EN 50160
Safety	
Compliance	EN 61010-1
Temperature	IEC 60068-2-2(Storing temperature)
Humidity	IEC 60068-2-30
Overload	IEC 60947-1
Vibrations	IEC 60068-2-6
Max voltage on banana input	1000V
Max voltage on current BNC input	1V
EMC	
Directives	93/68/EEC (Low Voltage Electrical Equipment)
	89/336/EEC and 2004/108/EC (EMC - Electromagnetic Compatibility)
	2006/95/EC - 72/23/EEC (LVD - Low Voltage Directive)
	2002/95/EC (RoHS - Restriction of Hazardous Substances)
	2002/96/EC and 2003/108/EC (WEEE - Waste Electrical and Electronic Equipment)
	IEC 61724
Compliance	EN 61326
	EN 61326/A1
	EN 61326/A2
	EN 61326/A3
Environmental Factors	
Operating Temperature	-10 to +55 °C
Storage Temperature	-20 to +85 °C
Humidity	95% (no condensation)
Minimum Altitude	0m
Maximum Altitude	2000m
Communication Interface	
Type	USB Mini A
Baud rate	115200

Accessories

Hardcase
iD-LOG battery pack
ID-LOG power supply unit
Set of 4 voltage cables (red, yellow, blue, black) with integrated Alligator clips
USB-A/mini USB-B cable
4GB MicroSD
Scratch guard tempered glass (mounted)
PC software Elnet PowerStudio CD
Operating manual
Rogowski Flexi cable 3000A (ID:400mm)

Optional Accessories

Rogowski Flexi CT

1A - 1000A (ID: 800mm)

5A - 3000A (ID: 400mm)

10A - 6000A (ID: 600mm)

0.1A - 5A AC

0.1A - 200A AC

0.5A - 400A AC / 0.5A - 600A DC

Accuracy of CT

RMS currents with flexible probe 3000A		
Scale 1	± 0.25%+0.15A	@ 6A < I RMS < 150A
Scale 2	± 0.25%+0.30A	@ 150A < I RMS < 600A
Scale 3	± 0.25%+0.75A	@ 600A < I RMS < 1500A
Scale 4	± 0.25%+1.50A	@ 1500A < I RMS < 3000A
RMS currents with 1000A clamp		
Scale 1	± 0.25%+0.05A	@ 2A < I RMS < 50A
Scale 2	± 0.25%+0.10A	@ 50A < I RMS < 200A
Scale 3	± 0.25%+0.25A	@ 200A < I RMS < 500A
Scale 4	± 0.25%+0.50A	@ 500A < I RMS < 1000A
RMS currents with 200A clamp		
Scale 1	± 0.25%+0.01A	@ 0.4A < I RMS < 10A
Scale 2	± 0.25%+0.02A	@ 10A < I RMS < 40A
Scale 3	± 0.25%+0.05A	@ 40A < I RMS < 100A
Scale 4	± 0.25%+0.10A	@ 100A < I RMS < 200A
RMS currents with 5A clamp		
Scale 1	± 0.25%+0.25mA	@ 0.01A < I RMS < 0.25A
Scale 2	± 0.25%+0.50mA	@ 0.25A < I RMS < 1A
Scale 3	± 0.25%+1.25mA	@ 1A < I RMS < 2.5A
Scale 4	± 0.25%+2.50mA	@ 2.5A < I RMS < 5A
Currents with double scale clamp AC/DC		
Scale 1 - 1mV/A (AC)	± 0.25%+0.02A	@ 0.8A < I RMS < 20A
Scale 2 - 1mV/A (AC)	± 0.25%+0.04A	@ 20A < I RMS < 80A
Scale 3 - 1mV/A (AC)	± 0.25%+0.10A	@ 80A < I RMS < 200A
Scale 4 - 1mV/A (AC)	± 0.25%+0.20A	@ 200A < I RMS < 400A
Scale 1 - 10mV/A (AC)	± 0.25%+2mA	@ 0.08A < I RMS < 2A
Scale 2 - 10mV/A (AC)	± 0.25%+4mA	@ 2A < I RMS < 8A
Scale 3 - 10mV/A (AC)	± 0.25%+10mA	@ 8A < I RMS < 20A
Scale 4 - 10mV/A (AC)	± 0.25%+20mA	@ 20A < I RMS < 40A
Scale 1 - 1mV/A (DC)	± 0.25%+0.03A	@ 1.2A < I RMS < 30A
Scale 2 - 1mV/A (DC)	± 0.25%+0.06A	@ 30A < I RMS < 120A
Scale 3 - 1mV/A (DC)	± 0.25%+0.15A	@ 120A < I RMS < 300A
Scale 4 - 1mV/A (DC)	± 0.25%+0.30A	@ 300A < I RMS < 600A
Scale 1 - 10mV/A (DC)	± 0.25%+3mA	@ 0.12A < I RMS < 3A
Scale 2 - 10mV/A (DC)	± 0.25%+6mA	@ 3A < I RMS < 12A
Scale 3 - 10mV/A (DC)	± 0.25%+15mA	@ 12A < I RMS < 30A
Scale 4 - 10mV/A (DC)	± 0.25%+30mA	@ 30A < I RMS < 60A

*The error of the instrument must be added that of the amperometric used.

IM

POWER QUALITY METER

Multifunction Meter | Demand Controller | Load Manager | Import Export | Harmonics | Power Quality | Digital/Analog Input or Output

HIGH-END MULTIFUNCTION METER FOR COMPREHENSIVE ENERGY MANAGEMENT!

Primary function of Elmeasure iM8000 is linked to M2M software platform via TCP/IP protocols to enable remote monitoring of the device. Device to server MQTT link can be through Ethernet & display's all the electrical parameters on webpage as well as TFT display. All meter configurations can be done from webpage and TFT Display.

Unique Features :

Sag & Swell with timestamp & 10 waveform storage.

Real-time THD & Individual harmonics (upto 63rd harmonics) with value & graph in the display & web browser.

Data storage upto 14GB.

Real-time FFT waveform for individual phase both current & voltage in the web browser.

Integrated web server for configuration & data.

Demand parameters (W, VA, VAR,) with Date & timestamp for Maximum Demand.

TOD option for Energy & Demand upto 8 slots.

Graphical Energy Report - Hourly, Daily & Monthly.

Direct cloud connectivity - Ethernet.

Data push in 5 sec. (ETH).

Diagnostic page.

Phasor diagram for voltage & current.

Pictorial representation of all 3 Phases simultaneous (Voltage & Current) in terms of sinusoidal waveforms.

High-resolution display with capacitive touch.

Individual phase energy for import & export with 1-second update.

High / Low recording VLL, VLN, A, Hz, W, VA, PF, VAR value storage with time stamp.

Real-time waveform for all the voltage & current can be displayed simultaneously on meter & web browser

Mechanical Specification:

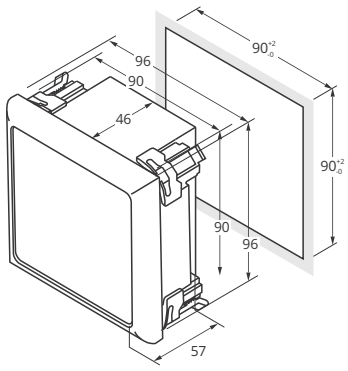

Features :

- Displays all the electrical parameters & waveforms on Webpage and TFT Display.
- 100% LIFO data recovery.
- Gateway IP, user name & password can be changed to default IP (192.168.5.175), username (elmeasure) & password (elmeasure) from holding hardware reset key for 10 seconds.
- Real time SD card status & memory space indication
- One touch recovery
- LED Indication for easy setup & trouble shooting
- Web browser for debug, configuration, setup & information on Device brief description.
- Configurable account based secure access - required login name & password for login
- Online setting changes (reboot is not required)
- Mobile data service network signal strength
- Color code indication for device & network connection
- Gateway statistic for remote diagnosis & troubleshooting
- Online debug status
- Built in RTC with configurable option
- DHCP (obtain an IP address automatically) or Static IP
- Configurable broker IP Address, port number, Quality of services
- Easy switch of Ethernet communication interface
- Secured Data transfer over MQTT with user authentication for connection & data transfer
- Multi-client Connection
- No Gateway ID conflict in wildcard topic enable
- Full device parameter logging.
- Transaction ID based data logging, publish & recovery.
- Transaction ID based message acknowledgement & auto retry/ recovery
- Options to disable live, log & recovery.
- Suitable for EMS application & Monitors all electrical data.
- Configurable UART Baud rate, all meter configurations through Webpage.
- Electrically isolated communication ports.

Multiplication factor for counter based energy mode

Full Scale in Watts : $\sqrt{3}$ × VPri x Apri /1000	0.4k to 4.0k	4.01k to 40k	40.1k to 400k	400.1k to 4000k	4M to 40 M	40 M to 400 M	400M to 4000M
Multiplication Factor:	0.01	0.1	1.0	10	100	1000	10000
Unit of display	kWh				MWh		GWh

WORKING PRINCIPLE

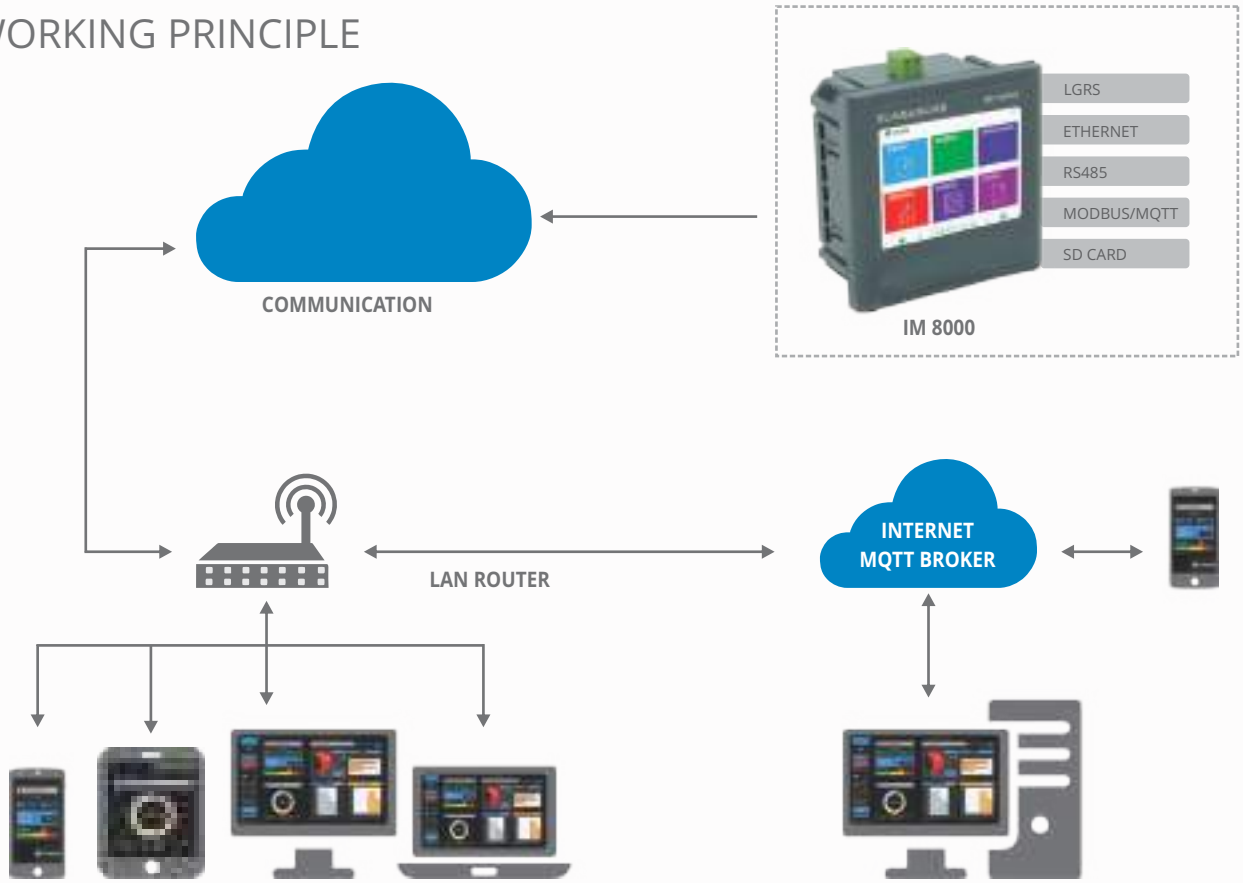

SOFTWARE SCREENS

Technical Specification:

Specification	Description
Accuracy:	Class 1 (Default) IEC 62053-21, Class 0.5S IEC 62053-22 (Option)
Sensing/ Measurement:	True RMS, 1 Sec update time, 4 Quadrant Power & Energy.
Input Voltage:	4 Voltage inputs (V_1, V_2, V_3, V_N); Programmable 110 or415V LL Nominal (Range 50 – 550V LL); Primary programmable up to 999 kV. Burden: 0.2VA Max.per phase
Input Current:	Current inputs (A_1, A_2, A_3) 50mA - 6A (Field configurable 1A or 5A). Primary programmable up to 99kA. Overload: 10A max continuous, 50A max for 3s Burden: 0.2VA Max, per phase.
Aux-Supply (control power):	80 – 300V AC / DC Burden: 5VA Max
Display type:	Touch Screen
Communication RS485 interface:	*Parity: Odd, Even, None (Prefered Even)* *Baud rate:* 9600 bps to 115200 bps. (Preferred 9600 bps). *Isolation:* 2000 volts AC isolation for 1 minute between communication and other circuits.
Weight:	Unpacked: 400gms, Packed: 500gms
Torque	1 N-m
Wire gauge	11 AWG

POWER CORPORATION

www.powercorporation.in
rudresh@powercorporation.in, powercorporation@yahoo.com, powercorporation1@gmail.com
9376181613

radix®

SHORTFORM CATALOG

BUILDING AUTOMATION

BMS Products **P6**

Transmitters and indicators optimised for BMS and cleanroom applications

Door Interlock Controllers **P11**

Access control and door interlock systems for the healthcare industry

GPS Network Clocks **P12**

Wired and wireless network clocks for maintaining uniform and accurate time keeping across a facility

TEMPERATURE **P13**

Wide range of products for temperature indication, measurement and control

LEVEL **P19**

Level gauges, switches, transmitters and controllers including for boiler applications

FLOW **P21**

Range of flow products including Electromagnetic flow meters, indicators, strainers, etc

PRESSURE

P23

Gauges in bourdon tube, diaphragm and capsule elements along with accessories

COMMUNICATION PRODUCTS

P24

Products for automation applications from signal conditioning to signal indication (Isolators, Analog I/O Modules, Converters, Scanners, Indicators)

AUTOMATION

P27

All types of control panels and automation services involving PLC, HMI, SCADA etc

PROCESS CONTROL

P29

Miscellaneous instruments used in process applications and thyristors

FLAMEPROOF INSTRUMENTS & SENSORS

P30

Instruments & sensors housed in special flameproof enclosures with various degrees of ingress, fire and explosion protection

SERVING PROCESS INSTRUMENTATION INDUSTRY SINCE 4 DECADES

Radix is dedicated to providing accurate, reliable and customised instruments for measuring Temperature, Pressure, Level, Flow, Relative Humidity and end-to-end solutions for Building Automation projects.

1980 One of India's leading instrumentation companies since 1980

6000 Customers across the world!

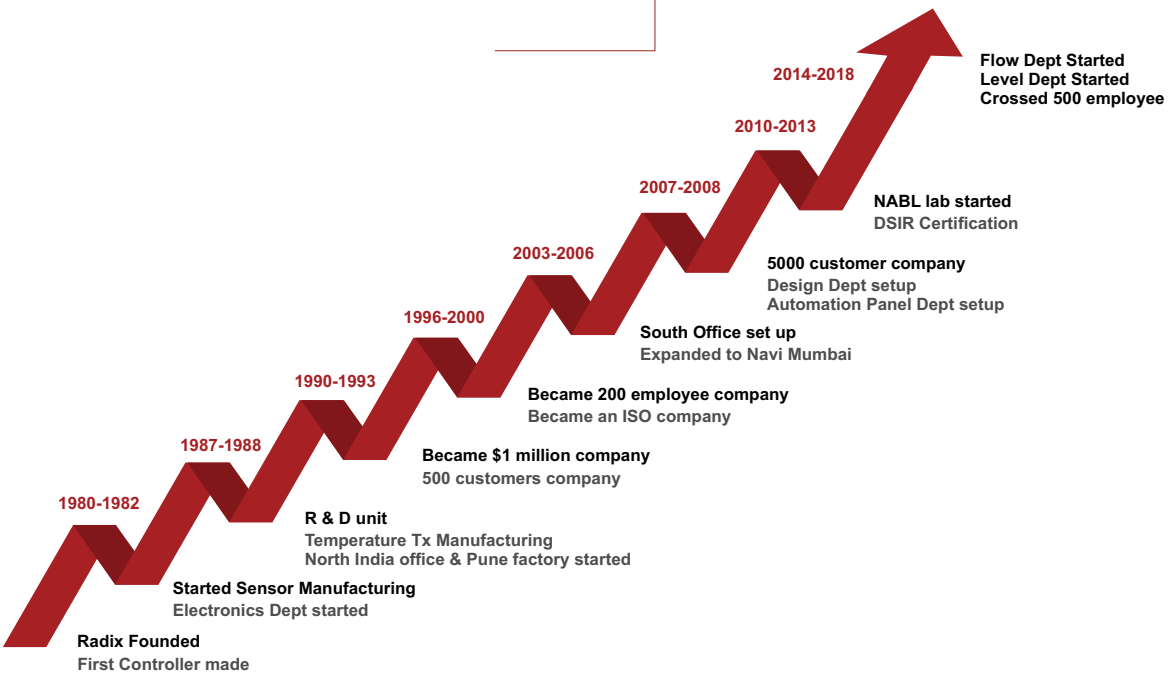

IN-HOUSE DESIGN AND DEVELOPMENT

Radix is a pioneer in maintaining the finest design competency, a meticulous control over quality and a customer-centric business model.

Our two R&D centres are working round the clock to develop products with best technology and features suitable for your applications

CUSTOMISED, RELIABLE, ACCURATE

- Large Development Team
- Deep Domain Expertise
- Simplified Sourcing & Execution
- Time & Cost Advantage

CLEAN ROOM INDICATORS

HAWKEYE

HAWKEYE RTC

HAWKEYE PRO

HAWKEYE FLP

HAWKEYE RXF

HAWKEYE RTC
WITH ANALOG OUTPUT

HAWKEYE ETH

HAWKEYE PRO ETH

T-SYNC

HAWKEYE MINI RTC

HAWKEYE MINI

DPG211

Model	Input	Digital Input	Buzzer Output	Analog Output	Supply	Display Digits	Communication
HAWKEYE	3 x Integral, Remote	No	Yes	0	85~265 VAC, 50/60 Hz / 20~35 VDC	3+3+3 (0.8”)	RS485 / MODBUS RTU
HAWKEYE	2 x Integral, Remote	No	Yes	0	85~265 VAC, 50/60 Hz / 20~35 VDC	3+3 (0.8”)	RS485 / MODBUS RTU
HAWKEYE RTC	3 x Integral, Remote	No	Yes	0	85~265 VAC, 50/60 Hz / 20~35 VDC	3+3+3+4 (0.56”)	RS485 / MODBUS RTU
HAWKEYE PRO	3 x Integral, Remote	Potential free AHU Input	Yes	0	85~265 VAC, 50/60 Hz / 20~35 VDC	LCD with backlight	RS485 / MODBUS RTU
HAWKEYE RXF	3 x Remote, Integral RH+T	No	No	0	85~265 VAC, 50/60 Hz	3+3+3+4 (0.56”)	RS485 / MODBUS RTU
HAWKEYE RTC	3 x Integral, Remote	No	Yes	3	85~265 VAC, 50/60 Hz / 20~35 VDC	3+3+3+4 (0.56”)	RS485 / MODBUS RTU
HAWKEYE ETH	3 x Remote, Integral RH+T	No	Yes	0	85~265 VAC, 50/60 Hz / 20~35 VDC	3+3+3 (0.8”)	MODBUS / TCP & Telnet
HAWKEYE PRO ETH	3 x Integral, Remote	Potential free AHU Input	Yes	0	85~265 VAC, 50/60 Hz / 20~35 VDC	LCD with backlight	MODBUS / TCP & Telnet
HAWKEYE RTC	3 x slave	No	Yes	0	85~265 VAC, 50/60 Hz / 20~35 VDC	3+3+3+4 (0.56”)	RS485 / MODBUS RTU
T-SYNC	-	No	No	0	85~265 VAC, 50/60 Hz / 20~35 VDC	4+2+6 (0.8”+0.56”+0.39”)	RS485 / MODBUS RTU
HAWKEYE MINI RTC	3 x Integral	No	Yes	0	24 VDC	4+4+4+4 (0.45”)	RS485 / MODBUS RTU
HAWKEYE MINI	3 x Remote	No	Yes	0	24 VDC	4+4+4+4 (0.45”)	RS485 / MODBUS RTU
DPG211	3 x Integral	No	Yes	0	24 VDC	4+4+4+4 (0.45”)	RS485 / MODBUS RTU

RH+T 2-WIRE TRANSMITTERS

SC804

SC805

SC806

SC807

RHT861

Model	Size hxwxd mm	Display Digits	Output	Supply	Degree of Protection	Mounting
SC804	149x140	4+4, LED	2 x 4~20 mA	11.5~32 VDC loop supply	IP66, FLP	Surface
SC805	80x82x85	4+4, LCD	2 x 4~20 mA	4.5~32 VDC loop supply	IP65	Surface / Duct mount
SC806	Surface : 119x119x85 Duct : 107x115	–	2 x 4~20 mA	4.5~32 VDC loop supply	IP66, FLP	Surface / Duct mount
SC807	80x82x85	–	2 x 4~20 mA	4.5~32 VDC loop supply	IP65	Surface / Duct mount
SC808	80x82x85	4+4, LCD	MODBUS RS485 RTU	20~32 VDC supply	IP65	Surface / Duct mount
RHT811	80x82x55	4+4, LCD / Without Display	1 / 2 x 0~10 V	18~30 VAC/DC	IP65	Surface / Duct mount
RHT811 (FLP)	Surface without display - 119x119x85 Surface with display - 150x150x104 Duct without display - 107x115	4+4, LCD / Without Display	1 / 2 x 0~10 V	18~30 VAC/DC	IP65, IP66, FLP	Surface / Duct mount
RHT861	80x82x85	4+4, LCD	4 x 4~20 mA	13.5~32 VDC loop supply	IP66	Surface / Duct mount

RH+T & DP INDICATORS - BATTERY OPERATED

DPG202

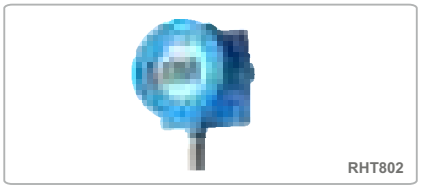
RHT802

RHT803

Model	Size hxwxd mm	Display Digits	Accuracy	Battery Life	Degree of Protection	Mounting
DPG202	90x110x40	4+4, LCD	± 1.5% DP, ± 0.5 °C	1 year+	NA	Panel
RHT802	148x148x105	4+4, LCD	± 2% RH, ± 0.5 °C	1 year+	IP65, FLP	Wall / Surface
RHT803	80x82x30	4+4, LCD	± 3%RH, ± 1 °C	1 year+	IP65	Wall / Surface

DP 2-WIRE TRANSMITTERS

DPT501

SCC503

SC504

DPT551

- 2-wire, 4~20 mA output
- Units : Pa, mmWC, mbar, inWG, inHg, PSI, mmHg
- High accuracy
- Software calibration - no trimpots
- 12~32 VDC Loop supply
- PC programmable
- Auto-zero adjustment with push button switch
- Surface / Duct / FLP mount

DP TRANSDUCERS

DPT511

Surface mount

Duct mount

Flameproof wall mount

Flameproof duct mount

- 4~20mA / 0~10 V outputs
- Unit : Pa, mmWC, mbar, inWG, inHg, PSI, mmHg
- Dual 7-segment LCD display
- Software calibration - no trimpots
- 18~30 VAC or DC
- PC programmable
- Auto-zero adjustment with push button switch
- Surface / Duct / FLP mount

RH+T INDICATORS / CONTROLLERS

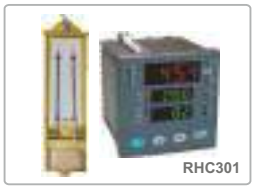
RHC301

HTC96

HX96A

- Input : RH and T signals from sensor
- Accuracy : ± 2% RH, ± 0.3 °C
- Upto 50 metres between sensor and instrument
- 85~265 VAC SMPS

Product	Model	Size hxwxd mm	RH+T Sensor	Display Digits	Setpoints	Retransmission Outputs	RS485	Mounting
Controller	HTC96	96x96x100	Remote	4+4	0/1/2	1	No	Panel
Controller	HX96A	96x96x100	Remote	4+4	0/1/2/3/4	2	Yes	Panel
Controller	RHC301	96x96x100	Remote	4+4+4	2/4	2	Yes	Panel
Controller	RHC201	96x96x100	Remote	4+4	0/2	1	No	Panel

WIRELESS TRANSMITTER-RECEIVER SYSTEMS

%RH, RTD, THERMOCOUPLE, LEVEL

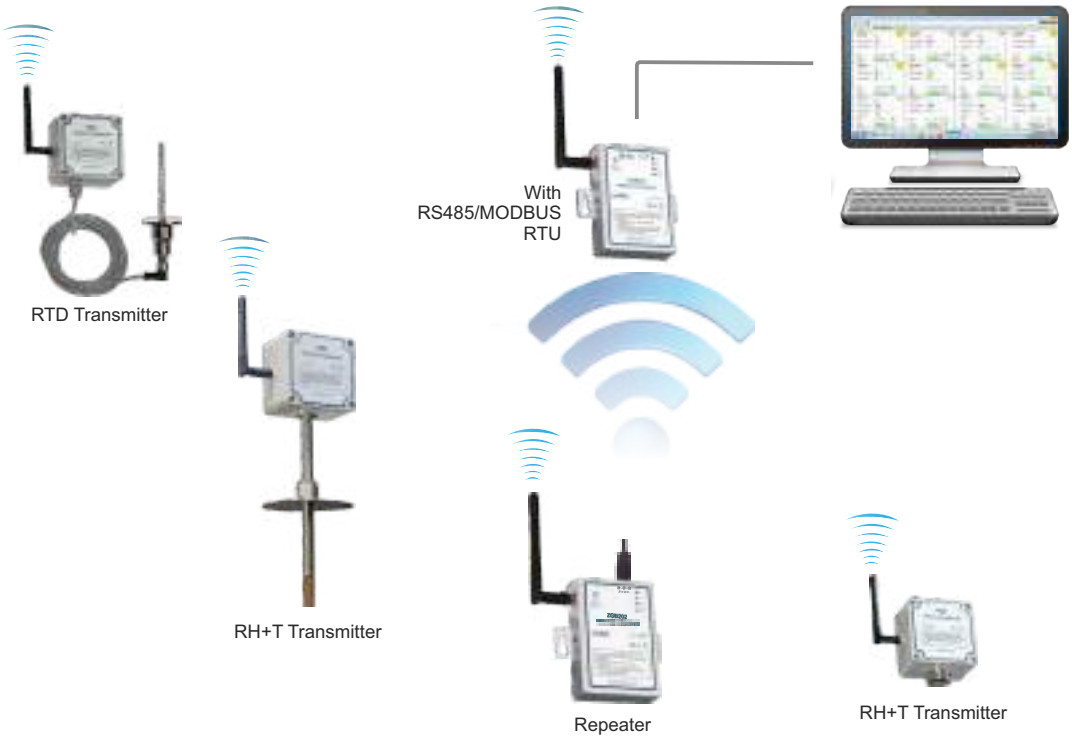

- Transmitter (Surface and Head Designs)
  - RTD : Pt100
  - Thermocouple : J, K, T, E, R, S, B, N
  - Level : % RH
- Range : Up to 120 m outdoor line of sight
  Up to 40 m indoor / urban

- Repeater to extend range
- Receiver with USB port
- Receiver with RS485 converter
- Free utility software ZGU201

- Full-featured SCADA option
- Battery life : Minimum 1 year
- Transmit interval : 2 to 3600 seconds
- RF strength mapping services optional

BMS, HVAC AUTOMATION

- Integrated BMS/EMS end-to-end solutions for Pharma, Commercial BMS, HVAC systems
- In-house team of Automation and Instrumentation specialists

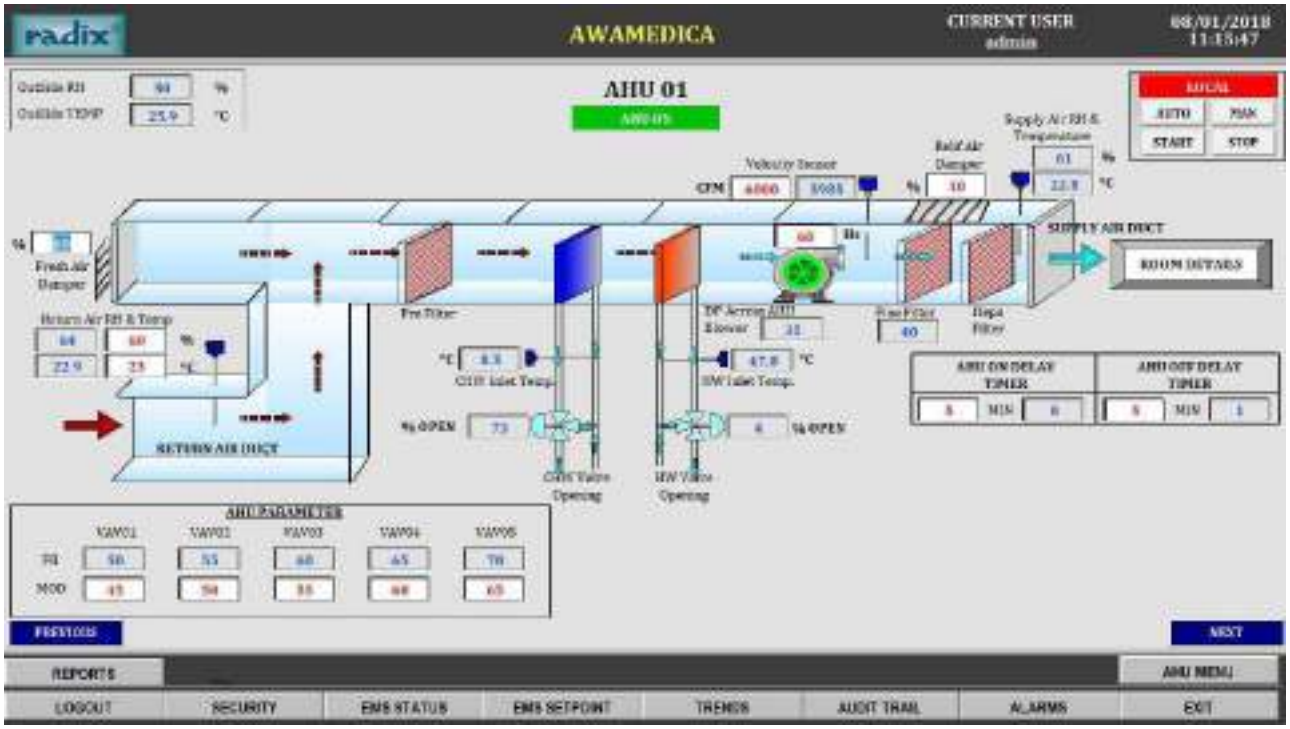

BMS System Architecture

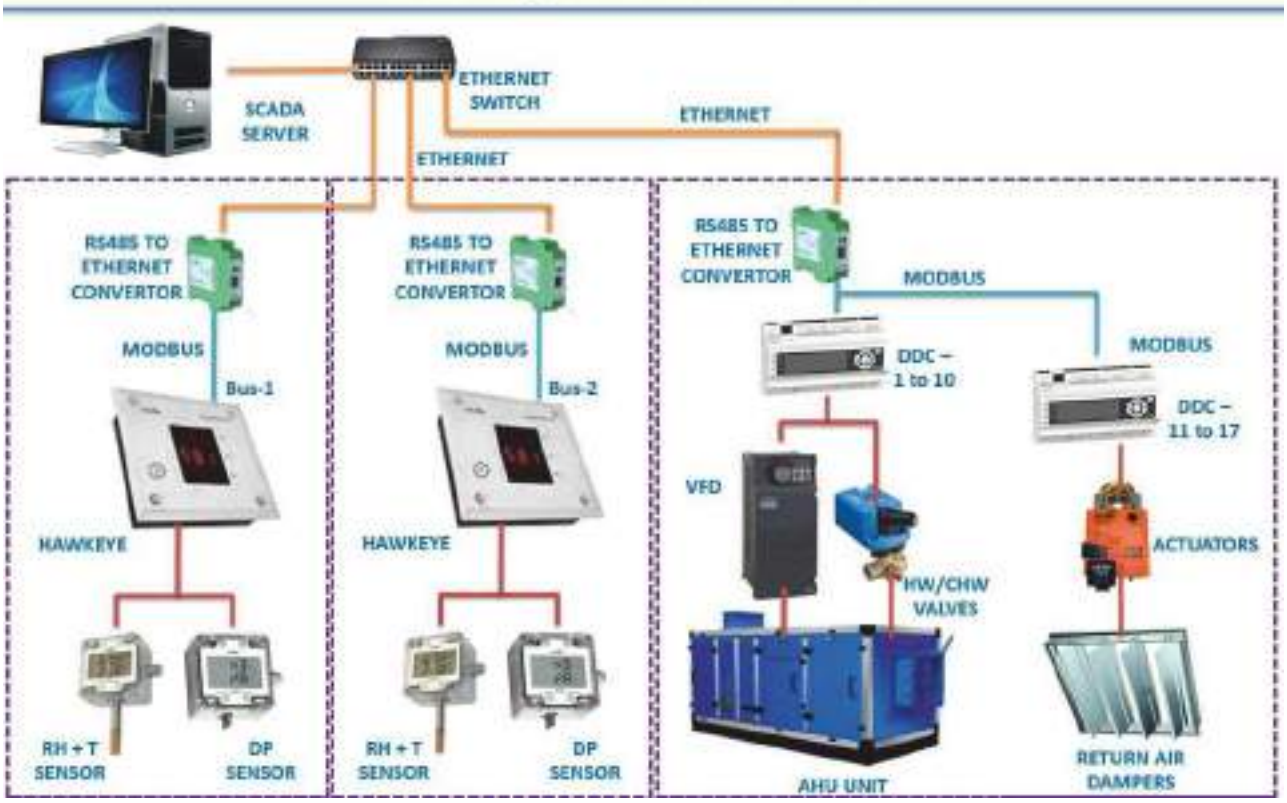

GREYSTONE ENERGY SYSTEMS INC

Duct Air Temperature (Return and Supply)

Immersion Temperature Sensor

Room Temperature Sensor

Duct Humidity and Temperature Sensor

Room Humidity and Temperature Sensor

Dew Point Sensor

Outside Humidity and Temperature

Pressure

Air velocity

CO/CO_2

Miscellaneous

Network

Dwyer Radix - International Distributor of Dwyer Products

Pressure

Air Velocity

CO/CO_2

Humidity

Averaging Temperature Sensors

Duct & Immersion Building Automation Temperature Sensors

DOOR INTERLOCK CONTROLLERS

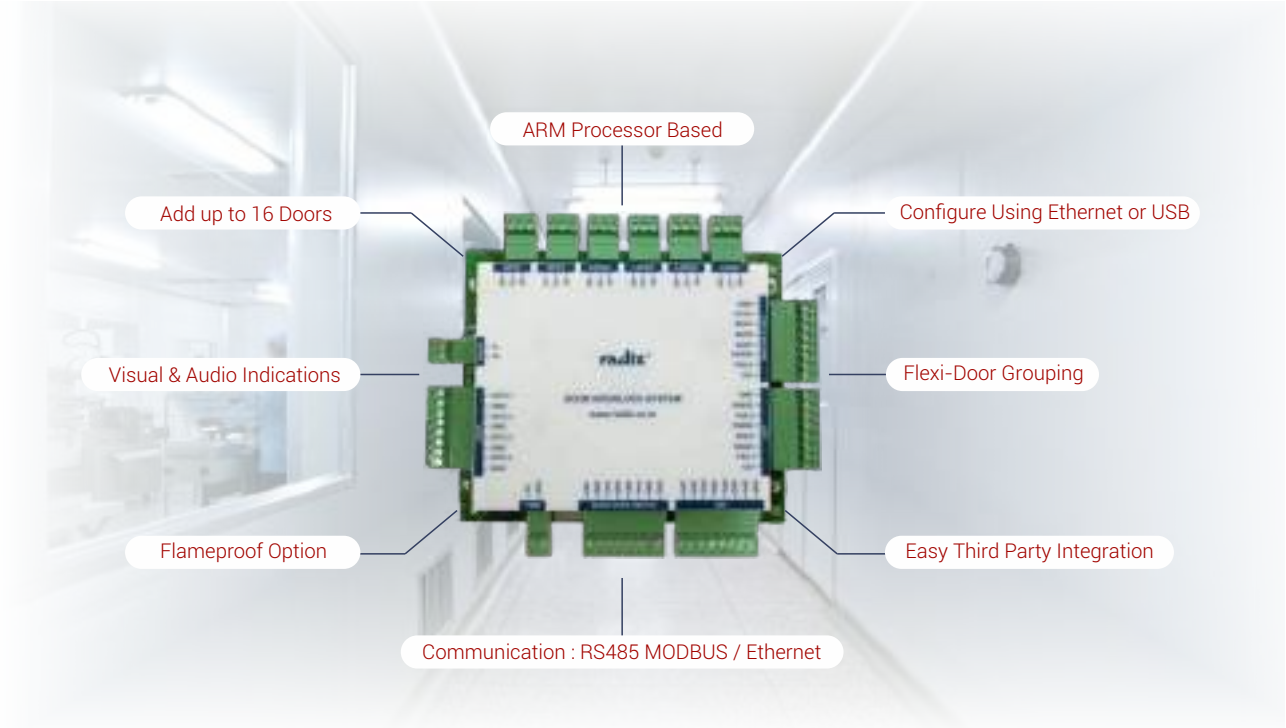

DXC241	DXC281	DXC341	DXC421
2~4 DOOR WITH RS485	2~8 DOOR WITH ETHERNET	2~4 DOOR FOR OEMs	PASS BOX CONTROLLER WITH RS485

ELECTROMAGNETIC DOOR LOCKS

- Type : Electromagnet / Drop bolt
- Holding force : Holding force 600lb/280Kg (99.99% pure copper coil used)
- Rust protection : Blue zinc-plating
- Voltage : 12VDC
- Current : 0.48A
- Operating temperature : -20 ~ 60 °C
- Options : Regular, IP67, FLP

EMERGENCY SWITCHES

- Contact type : Normally open
- Standard structure : Stainless steel panel, steel button
- Panel material : Stainless steel, brush finish

NO-TOUCH SWITCHES

- Input voltage : 12VDC
- Contact rating : 3A/120VAC 30VDC
- Operating temperature : -20 °C ~ 50 °C
- Life : 500000 operations
- IP : IP65 optional

GPS WIRELESS & NETWORK CLOCKS

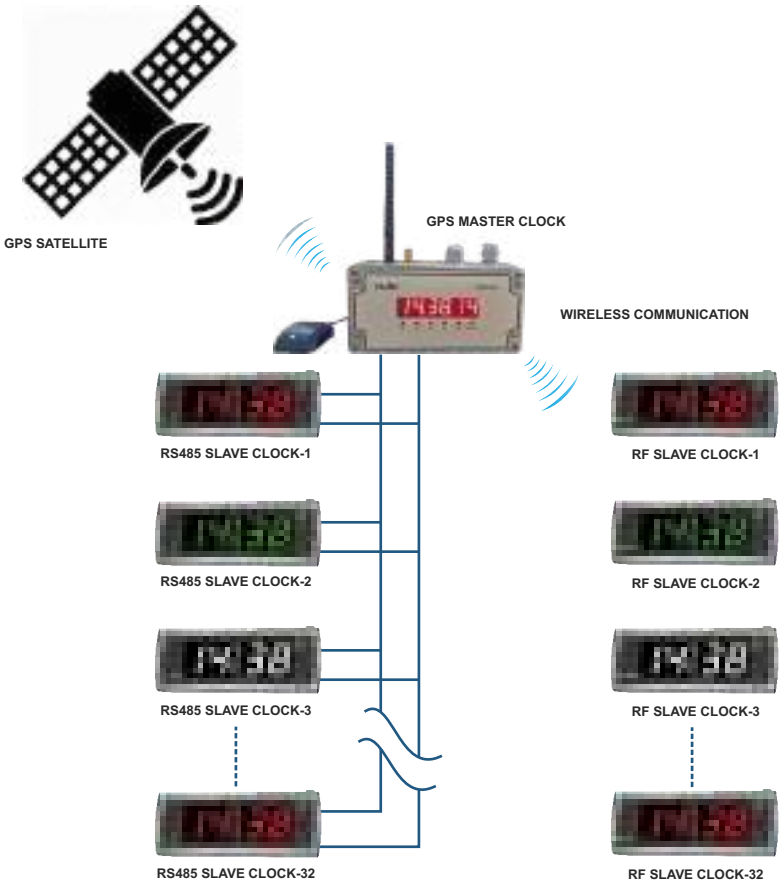

SLAVE CLOCKS

HH:MM:SS

HH:MM

Wired clock

Flameproof

- Time format : 4 digit (HH:MM), 6 digit (HH:MM:SS)
- Display colour : Red, White, Green
- Power supply : 85-265 VAC / 50 HZ
- Operating temperature : 0~50 °C
- Storage temperature : 0~60 °C
- Relative humidity : Below 90%, non-condensing

MASTER CLOCKS

- Time format : 6 digit (HH:MM:SS)
- Display colour : Red
- Isolation power supply and RS485 : 2000VAC, RMS, 1 minute
- Operating temperature : 0 - 50 °C
- Storage temperature : 0 - 60 °C
- Relative humidity : 0-95 %, non-condensing

GMC201
With RF, RS485

GMC202
With Ethernet, RS485

TEMPERATURE GAUGES

DIAL THERMOMETERS

- Bi-metallic sensing element
- -50 to 400 °C
- Weatherproof to IP68 per IS/IEC 60529:2001

TEMPERATURE SENSORS

MINIATURE PIPELINE RTDs

- Pt100, 3-wire, others on request
- -50 to 200°C measuring range
- Class A / higher accuracy
- 4-20 mA on request

RCP SERIES

SANITARY RTDs & THERMOCOUPLES

Polypropylene head

Aluminium head

ATEX head

SS mini head

- Pt100, 3-wire, other calibrations available
- -50 to 250°C, other ranges available
- Class A / higher, accuracy
- 4-20 mA on request

RHS SERIES

Tri-clover connection

TEMPERATURE SENSORS

AUTOCLAVE / STEAM STERILIZERS

MODEL RAC244

Silicone rubber jacketed cable

- Pt100, 3/4-wire
- Class A / higher accuracy
- 0 to 150°C measuring range

- Pt100, 3/4-wire
- Class A / higher accuracy
- 0 to 150°C

MODEL RAC243

Teflon insulated cable

- Special limits of error (Class 1)
- Stranded wires for flexibility
- 0 to 150°C measuring range

MODEL TAC243

Teflon insulated tip

DRY HEAT STERILIZER (DHS)

MODEL RDH245

- Pt100, 3-wire
- Class A accuracy
- 0 to 265 °C

TUNNEL VALIDATION

MODEL TTV246

- T- type or K-type calibrations
- Special limits of error (Class 1)
- Upto 360 °C measuring range

LYOHPHILIZER & DEEP FREEZER

- Pt100, 3-wire
- Class A / higher accuracy
- -100 to 200 °C measuring range

MODEL RFL258

- Copper / constantan (T type) thermocouple
- Stranded wires for flexibility
- -100 to 200 °C measuring range

MODEL TFL248

Teflon insulated tip

RTD WITH M12 CONNECTOR

MODEL RCM202

- Pt100, 3-wire, others on request
- Class A / higher accuracy
- -50 to 200°C measuring range

RTDs FOR VESSELS & PIPES

MODEL RHP502 MODEL RTP503

FOR TEMPERATURE MEASUREMENT IN TUBES

- Pt100, 3-wire
- Stranded wires for flexibility
- -100 to 200 °C measuring range

MODEL RHF200

WITH G1/2 HYGIENIC

MODEL RHF400

WITH INGOLD PORT

- Pt100, 3-wire
- Class A / higher accuracy
- 0 to 200°C

TEMPERATURE SENSORS

SURFACE TEMPERATURE

- SS mounting clamp
- SS pods
- Class A accuracy
- Detachable sensor
- -20 to 200 °C measuring range

MODEL RCE200 MODEL RCS200

CLAMP-ON RTD

PIPE LINE RTDs

MODEL RHP602 MODEL RHP612 MODEL RTS600

- Offered with Weld in connection, clamp in, sanitary Tri-clover RTD

HVAC AND GAS TEMPERATURE MEASUREMENT

MODEL RHV203 MODEL RHV502

IN-DOOR *OUT-DOOR*

MODEL RHV600

RTD FOR AIR AND GAS

Perforated Tip

MODEL RHV303

MODEL RHV302
Closed Tip

AIR / GAS / DUCT TEMPERATURE MEASUREMENT

THERMOWELL ASSEMBLIES

- Tubular fittings used to protect temperature sensors

VALIDATION PORT

MODEL VPA241

- Slots for 18 RTDs / TC
- 1.5" Tri-clover mounting
- Upto 150 °C and 3 bar pressure

GENERAL PURPOSE ASSEMBLIES

- Pt100, 3/4-wire, others on request
- Class A / higher accuracy
- -50 to 400°C measuring range

RHW SERIES FOR WP & RHX SERIES FOR FLP MODELS

WEATHERPROOF & FLAMEPROOF TERMINATIONS

PID CONTROLLERS

NEX201

NEX302

NEX203

NEX605

NEX207

Model	Size hxwxd mm	Control Mode	Input	Digital Input	Relay Output	Display Digits	Transmitter Supply	Analog Output	RS485 / MODBUS RTU	Remarks
NEX201	48x48x85	Indicator/Onoff/PID/ Profile/Heat+Cool PID	2 x Universal input	Upto 3	Maximum - 5	4+4	Yes	Upto 2	Yes	Full featured
NEX202	48x96x60	Indicator/Onoff/PID/ Profile/Heat+Cool PID	2 x Universal input	Upto 3	Maximum - 5	4+4	Yes	Upto 2	Yes	Full featured
NEX203	96x48x60	Indicator/Onoff/PID/ Profile/Heat+Cool PID	2 x Universal input	Upto 3	Maximum - 5	4+4	Yes	Upto 2	Yes	Full featured
NEX205	96x96x60	Indicator/Onoff/PID/ Profile/Heat+Cool PID	2 x Universal input	Upto 6	Maximum - 7	4+4	Yes	Upto 2	Yes	Full featured
NEX207	164x178x125	Indicator/Onoff/PID/ Profile/Heat+Cool PID	2 x Universal input	Upto 2	Maximum - 4	4+4	Yes	Upto 2	Yes	Full featured
X96P	96x96x100	PID Controller	2 x Universal input	No	Maximum - 4	4+4+3	Yes	Upto 2	Yes	Full featured
NEX301	48x48x61	PID Controller	TC, RTD	No	Maximum - 2 Control - 1, Alarms - 1	4+4	No	No	No	Economy range
NEX301	48x48x61	PID Controller with soak timer and heat+cool Mode	TC, RTD	No	Maximum - 2 Control - 1, Alarms - 1	4+4	No	No	No	Economy range
NEX301	48x48x61	Indicator with Alarms	mA/Vin	No	Maximum - 2	4+4	Yes	No	No	Economy range
NEX302	48x96x35	PID Controller	TC, RTD	No	Maximum - 2 Control - 1, Alarms - 1	4	No	No	No	Economy range
NEX302	48x96x35	Indicator with Alarms	TC, RTD, mA, Vin	No	Maximum - 2	4	Yes	No	No	Economy range
NEX305	96x96x35	PID Controller	TC, RTD	No	Maximum - 2 Control - 1, Alarms - 1	4+4	No	No	No	Economy range
NEX305	96x96x35	PID Controller with soak timer and heat+cool Mode	TC, RTD	No	Maximum - 2 Control - 1, Alarms - 1	4+4	No	No	No	Economy range
NEX307	250x150x95	Indicator with Alarms	TC, RTD, mA, Vin	No	Maximum - 1	1	Yes	No	No	Economy range
NEX601	48x48x85	Indicator/Onoff/PID	TC, RTD, mA, Vin	No	Maximum - 2	4+4	Yes	Upto 1	Yes	Midrange
NEX602	48x96x35	Indicator/Onoff/PID	TC, RTD, mA, Vin	No	Maximum - 2	4	Yes	Upto 1	Yes	Midrange
NEX604	72x72x75	Indicator/Onoff/PID	TC, RTD, mA, Vin	No	Maximum - 2	4	Yes	Upto 1	Yes	Midrange
NEX605	96x96x35	Indicator/Onoff/PID	TC, RTD, mA, Vin	No	Maximum - 2	4+4	Yes	Upto 1	Yes	Midrange

PROGRAMMABLE TEMPERATURE / PROCESS CONTROLLERS, INDICATORS

X96Δ

TEC401

FLT601

Model	Size hxwxd mm	Input	Setpoints	Analog Output	Supply	Display Digits	RS485 / MODBUS RTU	Remarks
X96Δ	96x96x100	2 x Universal	4	2	85~265 VAC, 50/60 Hz / 20~35 VDC	4+4+4	Yes	Difference, Average, etc
TEC401	48x96x112	Universal	4	1	85~265 VAC, 50/60 Hz / 18~35 VDC / 12~55 VDC	4 ½	No	Process Indicator with alarms
FLT601	96x96x100	0/4~20 mA, 0~10 VDC	4	1	85~265 VAC, 50/60 Hz	6+8	Yes	-19999 to 99999, 4 setpoints, relay modes, linear or square root input

2-WIRE TRANSMITTERS

SCC631

TX1HM
Pt100

SCC622

SCC633

TX3DR

Model	Input Type	Input User Programmable	Output Type	Accuracy	Isolation	Loop Supply (VDC)	Technology	Size HxWxD mm	Mounting
SCC602	Universal	Yes, using DCC501	2-wire, 4~20 mA	0.1%	2000 VAC	7.5 ~ 48	Microprocessor	100x12.5x114	DIN rail
SCC621	RTD	No	2-wire, 4~20 mA	0.1%	NA	6.5 ~ 32	Analog	100x12.5x114	DIN rail
SCC622	RTD	Yes, using DCC502	2-wire, 4~20 mA	0.1%	1800 VAC	7.5 ~ 45	Microprocessor	100x12.5x114	DIN rail
SCC631	Universal	Yes, using DCC503 or DCC501	2-wire, 4~20 mA, HART	0.1%	2000 VAC	7.5 ~ 48	Microprocessor	44x22.5	for DIN form B sensor head
SCC632	Universal	Yes, using DCC503 or DCC501	2-wire, 4~20 mA, HART	0.1%	2000 VAC	7.5 ~ 48	Microprocessor	100x12.5x114	DIN rail
SCC633	Universal	Yes, using HART programmer	2-wire, 4~20 mA, HART	0.1%	2000 VAC	10.5 ~ 45	Microprocessor	96x120	Field mount, FLP
SCC641	Universal	Yes, using DCC501	2-wire, 4~20 mA	0.1%	2000 VAC	7.5 ~ 48	Microprocessor	44x22.5	for DIN form B sensor head
SCC642	RTD	Yes, using DCC502	2-wire, 4~20 mA	0.1%	NA	7.5 ~ 48	Microprocessor	44x22.5	for DIN form B sensor head
SCC643	Universal	Yes, using PC & USB programmer	2-wire, 4~20 mA	0.1%	NA	7.5 ~ 45	Analog	43x17	for DIN form B sensor head
SCC643	TC, RTD	Yes, using PC & USB programmer	2-wire, 4~20 mA	0.1%	NA	7.5 ~ 45	Analog	43x17	for DIN form B sensor head
SCC671	RTD	Yes, using PC based utility software	2-wire, 4~20 mA	0.1%	NA	7.5 ~ 30	Analog	44x22.5	for DIN form B sensor head
TX1DR	TC, mV	No	2-wire, 4~20 mA	0.1%	NA	6.5 ~ 32	Analog	80x25x85	DIN rail
TX1DR	RTD	No	2-wire, 4~20 mA	0.1%	NA	6.5 ~ 32	Analog	80x25x85	DIN rail
TX1HM	RTD	No	2-wire, 4~20 mA	0.1%	NA	6.5 ~ 32	Analog	47x17	for DIN form B sensor head
TX2DR	TC, mV	No	2-wire, 4~20 mA	0.1%	1500 VAC	10 ~ 30	Analog	80x25x85	DIN rail
TX2DR	RTD	No	2-wire, 4~20 mA	0.1%	1500 VAC	10 ~ 30	Analog	80x25x85	DIN rail
TX3DR	Universal	Yes	2-wire, 4~20 mA	0.1%	2000 VAC	11 ~ 32	Analog	75x45x110	DIN rail

CALIBRATORS

Precision calibrator - Radical

- 1uV / 1uA / 10m Ω resolution
- Measure / Source mV, mA, RTDs, thermocouples, ohms
- Simulate 4 to 20 mA transmitter
- 24V loop supply
- Step, ramp, % scale, min-max values
- 8~14 hours of use with Li-ion rechargeable battery

Universal portable calibrator - Microcal

- High resolution : 0.1 °C or °F, 10 uV, 1 uA, 0.02 ohms
- Measure and Source, thermocouples, Pt100 RTD, mV & mA
- High accuracy : ± 0.02% of FS ± 2 counts (except ohms)
- Ni-cad batteries for 4 to 8 hours operation on single charge
- Available with NPL traceable internal or 3rd party certificate

HANDHELD THERMOMETERS

TC K — DIGIRAD71

- Resolution : 0.1 / 1°C
- Display : 3 ½ digit, 7 segment 0.5" (12.7mm) LCD display with maximum reading of 1999
- Accuracy :
  ± (0.3% of reading +1°C)
  -50°C to 1000°C
  ± (0.5% of reading +1°C)
  1000°C to 1300°C

Pt100 — ACCURAD71

- Resolution : 0.1 / 1°C
- Display : 3 ½ digit, 7 segment 0.5" (12.7mm) LCD display with maximum reading of 1999
- Accuracy :
  -150.0°C to 199.9°C : ± 0.3 °C
  -200°C to 600°C : ± 1°C

UNIVERSAL — UNIRAD

- Universal input : 8 TC, 3 RTD
- Resolution : 1, 0.1
- Display : 4 digit, 7 segment 0.5" (12.7mm) LCD display with maximum reading of 9999
- 0.1% linearisation accuracy
- Software calibration - no trimpots

RH+T — HUMIRAD71

- Resolution : 0.1
- Display : 3 digit, 7-segment, 0.5" (12.7mm) LCD display with maximum reading of 99.9
- Accuracy : ± 2% RH
  ± 0.3°C
- Software calibration - no trimpots

THERMOCOUPLE & RTD PROBES

Standard Immersion Probe

Pt100

Standard Immersion Probe (MI)

Pt100

Quick Response Immersion Probe (MI)

Pt100

Teflon Coated Immersion Probe

Pt100

Needle Probe

Pt100

Prick Probe

Pt100

Standard Immersion Probe

Pt100

Air Probe

TC K

Standard Immersion Probe

TC K

Quick Response Immersion Probe

TC K

High Temperature Immersion Probe

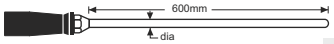

TC K

Teflon Coated Immersion Probe

TC K

Needle Probe

TC K

Prick Probe

TC K

Air Probe

TC K

Leaf Surface Probe - 400 °C

TC K

Leaf Surface Probe - 600 °C

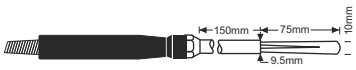

TC K

Leaf Surface Probe - 800 °C

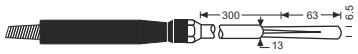

TC K

Bow Curved Surface Probe

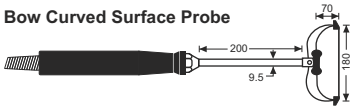

TC K

Smithy Probe

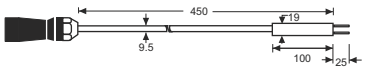

TC K

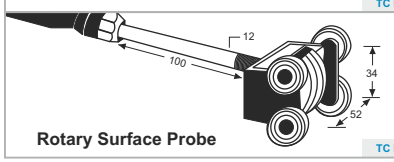

Rotary Surface Probe

TC K

LEVEL GAUGES

Tubular Gauge

C-C distance : 400-3000mm
Range : Upto 150 °C and 10 kg/cm^2

Reflex Gauge (Rear-rear)

C-C distance : 170-3000 mm
Range : Upto 400 °C and 210 kg/cm^2

Reflex Gauge (side-side)

C-C distance : 170-3000 mm
Range : Upto 400 °C and 210 kg/cm^2

Transparent Gauge

C-C distance : 170-3000 mm
Range : Upto 400 °C and 210 kg/cm^2

Magnetic Gauge with Transmitter

C-C distance : 300-5000 mm
Range : Upto 400 °C and 100 kg/cm^2

Magnetic Gauge with Switch

C-C distance : 300-5000 mm
Range : Upto 400 °C and 100 kg/cm^2

Dip stick type with Switch

C-C distance : 300-5000 mm
Range : Upto 400 °C and 100 kg/cm^2

Float & Board Gauge

Easy to install, modular design
Range : 1 - 15 meters
Liquid density : >0.8 g/cm

LEVEL SWITCHES

Float Guided Switch

Range : Upto 150 °C and 10 kg/cm^2
Liquid density : >0.7 g/cm^3

Cable Float Switch

Range : Upto 70 °C and 2 kg/cm^2
Liquid density : >0.75 g/cm^3

Side Mounted Switch

Range : Upto 350 °C and 20 kg/cm^2
Liquid density : >0.7 g/cm^3

Conductivity Switch

Range : Upto 80 °C and 5 kg/cm^2

Displacer Switch

Range : Upto 300 °C and 100 kg/cm^2

Capacitance Switch

Range : Upto 60 °C and 5 kg/cm^2

Rotary Paddle Switch

For Solids
Ambient temperature & pressure
Bulk density : >0.5 g/cm^3

Miniature Float Switch

Range : Upto 150 °C and 10 kg/cm^2
Liquid density : >0.7 g/cm^3

radix®

LEVEL TRANSMITTERS

Float Guided Level Transmitter

Range : Upto 150 °C and 10 kg/cm^2
Liquid density : >0.7 g/cm^3

Capacitance Type Level Transmitter

For liquids and solids
Range : Upto 60 °C and 5 kg/cm^2

Submersible Level Transmitter (Internal mounting)

Slended design for narrow openings
Maximum temperature : 70 °C

Submersible Level Transmitter (EXternal mounting)

Slended design for narrow openings
Maximum temperature : 70 °C

Radar Level Transmitter (Ex-proof)

Non contact type, Ex-proof option
Range : Upto 250 °C and 20 kg/cm^2

Radar Level Transmitter (Contact - Rope Type)

Non contact type, Ex-proof option

Ultrasonic Level Transmitter

For Liquids and solids
Range : Upto 70 °C and 1 kg/cm^2
LCD Display

Displacer Type Level Transmitter

For viscous and slurry type liquids
Range : Upto 300 °C and 100 kg/cm^2

LEVEL CONTROLLERS

Panel Mounting

Wall Mounting

Din Rail Mounting

Ex Proof

With Volume Indicator

- Upto 4 set points
- Latching through DIP switch
- Site settable

IBR CERTIFIED MANUFACTURING FACILITY

Approved for use in Boiler Application

LEVEL

FLOW PRODUCTS

ELECTROMAGNETIC FLOW METER

FLANGE TYPE

SANDWICH TYPE

TRI-CLOVER TYPE

- Maximum temperature : 160 °C
- Maximum pressure : 20 Kg/cm^2
- Flow velocity : 1 to 10 m^3/s
- Communication - MODBUS, HART (optional)
- Rubber / PTFE / PFA lining
- Upto 20 µs conductivity

ULTRASONIC FLOW METER, TRANSDUCER UNIT

CLAMP ON TYPE

INSERTION TYPE

IN-LINE TYPE

- Maximum temperature : -30 to 70 °C
- Flow velocity : 0 to ±32 m^3/s
- Communication - MODBUS

ULTRASONIC FLOW METER, TRANSMITTER UNIT (DISPLAY)

WALL-MOUNTED

HANDHELD (CLAMP ON TYPE)

- Maximum temperature : -20 to 70 °C
- Flow velocity : 0 to ±32 m^3/s
- Communication : MODBUS

PADDLEWHEEL FLOWMETER

- Service : Compatible water-based fluids
- Maximum temperature : 100 °C
- Maximum pressure : 22 kg/cm^2

FLOW PRODUCTS

SIGHT GLASS INDICATORS

SUITABLE FOR LIQUIDS AND GASES

GLASSES CAN BE INDIVIDUALLY REMOVED & REPLACED

- Service : Liquids and gases
- Glasses can be individually removed and replaced
- Maximum temperature : 250 °C
- Maximum pressure : 100 kg/cm^2

FLOW RATE INDICATORS/TOTALISERS

MONITORING AND CONTROLLING CONTINUOUS AS WELL AS BATCH FLOW PROCESSES

- 4 Setpoints / Relays
- Isolated 4~20 mA output
- Isolated RS485/MODBUS RTU

FLT601
6-digit Rate Indicator,
8-digit Totaliser

FLT401
4-digit Rate Indicator,
6-digit Totaliser

FLOW

STRAINERS

Y-STRAINER

FLANGED TYPE, ½" TO 12", SCREWED & SOCKETED, ½" TO 2"
CAST STEEL & CAST STAINLESS STEEL

TEE STRAINER

FLANGED / BUTTWELDED, 4" TO 24"
CARBON STEEL & STAINLESS STEEL

DUPLEX STRAINER

FLANGED TYPE, 2" TO 12
CARBON STEEL & STAINLESS STEEL

BASKET STRAINER

FLANGED TYPE, 4" TO 24"
CARBON STEEL & STAINLESS STEEL

PRESSURE GAUGES

Bourdon Type Industrial

100.000

Bourdon Type Industrial

110.000

With Sealed Unit & Cup Type Tension Flanges

400.000

With Welded Sealed Unit

400.004

With Sealed Unit & SS Tension Flanges

400.001

With Sealed Unit & Flush Mounting

400.005

With Sealed & Flanged Flush Diaphragm Seal

400.007

With Sealed Unit & I-Section Flange

400.006

With Diaphragm Seal for Pulp & Paper Industry

400.008

With Flange & Extended Sealed Unit

400.009

With Sealed Unit & Extension Capillary

400.015

Contact Gauge

101.000

Diaphragm Gauge for Low Pressure

500.000

Diaphragm Gauge with Compact Capsule

600.100

Sanitary Gauges

300.000

With SMS connection

300.001

Pressure Transmitters

- With Triclover - PTF series
- With Welded Sealed Unit
- With Flush Diaphragm

With Welded Sealed Unit

With Flush Diaphragm

SCC506

SIGNAL ISOLATORS

SI3P

SCC313

SCC311

MSI7P

SCC401

Model	Size HxWxD mm	Input	No. of Output	Output	Supply	Display	Mounting	Remarks
SI3P	75x55x110	Voltage, Current, TC/RTD, etc	1	0/4~20 mA, 0~10 V, etc	85~265 VAC, 50/60 Hz / 17~35 VDC	–	DIN rail	Most popular
SI3P	75x55x110	Load Cell	1	0/4~20 mA, 0~10 V, etc	85~265 VAC, 50/60 Hz / 17~35 VDC	–	DIN rail	New
SI4P	75x45x110	0/4~20 mA	2	0/4~20 mA	17~35 VDC	–	DIN rail	1 Kohm load, Line fault detection
SI4P	75x55x110	0/4~20 mA	2	0/4~20 mA	85~265 VAC, 50/60 Hz	–	DIN rail	1 Kohm load, Line fault detection
SCC301	80x25x85	0/4~20 mA	1	0/4~20 mA	20~35 VDC	–	DIN rail	HART compatible
SCC311	75x55x110	Universal	1, 2	0/4~20 mA, 0~10 V, etc	85~265 VAC, 50/60 Hz / 20~30 VDC	4 digit LED	DIN rail	Programmable, RS485/MODBUS
SCC313	100x22.5x114	Universal	1, 2	0/4~20 mA, 0~10 V, etc	85~265 VAC, 50/60 Hz / 18~42 VDC	–	DIN rail	Programmable, RS485/MODBUS
SCC314	100x22.5x114	AC Voltage, DC Voltage, AC Current, DC Current	1, 2	0/4~20 mA, 0~10 V, etc	85~265 VAC, 50/60 Hz / 18~42 VDC	–	DIN rail	Programmable, RS485/MODBUS
SCC401	100x22.5x114	Voltage, Current, TC/RTD, Ohms, etc	1	0/4~20 mA, DC Volts	85~265 VAC, 50/60 Hz / 20~36 VDC	–	DIN rail	High Accuracy
SCC402	100x22.5x114	AC Voltage, DC Voltage, AC Current, DC Current	1	0/4~20 mA, DC Volts	85~265 VAC, 50/60 Hz / 20~36 VDC	–	DIN rail	High Accuracy
VISO	75x55x110	0~±10 V, 0~250hz	1, 2	0~±10 V, 0~250 Hz	17~35 VDC	–	DIN rail	For AC & DC signals
MSI7P	75x100x110	Universal	3, 4, 5	0/4~20 mA, 0~10 V, etc	85~265 VAC, 50/60 Hz / 20~35 VDC	2x16 LCD	DIN rail	Programmable, RS485/MODBUS
MSI7P	75x100x110	Oxygen Lambda Sensor	1, 2	0/4~20 mA, 0~10 V, etc	85~265 VAC, 50/60 Hz / 20~35 VDC	2x16 LCD	DIN rail	Programmable, RS485/MODBUS
MSI7P	75x100x110	Oxygen Probe (Carbon Potential)	1, 2	0/4~20 mA, 0~10 V, etc	85~265 VAC, 50/60 Hz / 20~35 VDC	2x16 LCD	DIN rail	Programmable, RS485/MODBUS
LPI51	80x25x85	4~20 mA DC	1	4~20 mA	Loop powered	–	DIN rail	For AC & DC signals
LPI61	80x25x85	4~20 mA DC	1	4~20 mA	Loop powered	–	DIN rail	For AC & DC signals

ANALOG INPUT MODULES

SCM201

SCM203

SCM211

Model	No. of Channels	Input type	Input User Programmable	Input Channel-to-Channel Isolation	Communication Port	Supply	Size HxWxD in mm	Mounting
SCM201	8	Universal	Yes, through keys	No	RS485	17~60 VDC, 85~265 VAC	75x100x110	DIN rail
SCM203	8	Universal	Yes, through keys	No	Ethernet	15~30 VDC, 85~265 VAC	75x100x110	DIN rail
SCM211	4	Universal	Yes, through keys	300 VAC or 400 VDC	RS485	15~30 VDC, 85~265 VAC	75x100x110	DIN rail

PROTOCOL CONVERTERS & GATEWAYS

DCC201

DCC211

DCC501

DCC505

DCC601

Model	Description	Utility Software	Supported Serial Parameter	Enclosure/ Mounting	Power Inputs
DCC201	SERIAL TO ETHERNET CONVERTER	Available	Configurable baud rate, parity, data bits, stop bits, IP address	DIN Rail, 22.5mm wide	DC jack or terminal
DCC203	MULTIHOST SERIAL TO ETHERNET CONVERTER	Available	Configurable baud rate, parity, data bits, stop bits, IP address	DIN Rail / Surface	PoE (IEEE 802.3af, Class 1) and DC jack
DCC211	SERIAL TO ETHERNET CONVERTER WITH DUAL MASTERS	Available	Configurable baud rate, parity, data bits, stop bits, IP address	DIN Rail / Surface	PoE (IEEE 802.3af, Class 1) and DC jack
DCC301	RS232-RS485 CONVERTER	NA	ANY	DIN Rail / Surface	DC jack or terminal
DCC302	RS485 REPEATER	NA	ANY	DIN Rail / Surface	DC jack or terminal
DCC501	USB TO SERIAL CONVERTER - ISOLATED	NA	NA	DIN Rail / Surface	PC
DCC503	USB TO HART CONVERTER - ISOLATED	NA	Configurable baud rate, parity, data bits, stop bits, IP address	DIN Rail / Surface	PC
DCC505	USB TO RS485 CONVERTER - ISOLATED	Available	Configurable baud rate, parity, data bits, stop bits, IP address	DIN Rail / Surface	PC
DCC506	USB to RS232 CONVERTER	NA	ANY	Surface / Wall	PoE (IEEE 802.3af, Class 1)
DCC621	ETHERNET I/O Module	Available	Configurable baud rate, parity data bits, stop bits IP address	DIN Rail 35 mm wide	PoE (IEEE 802.3af, Class 1)
DCC601	ETHERNET I/O Module	Available	Configurable baud rate, parity, data bits, stop bits, IP address	DIN Rail / Surface	PoE (IEEE 802.3af Class 1) and DC Jack
DCC602	ETHERNET I/O Module	Available	Configurable baud rate, parity, data bits, stop bits, IP address	Surface / Wall mount	PoE (IEEE 802.3af Class 1) and DC Jack

SCANNERS

MULTI-CHANNEL SCANNERS

ISOSCAN-H

ISOSCAN-V

- Upto 16 inputs/16 outputs
- For Temperature, Pressure, Flow, Level, RH, Conductivity, etc.
- Various Input(X)/Output(Y) combinations : X4Y0, X4Y8, X8Y4, X8Y16, X16Y16, etc
- Universal Input

- 3 key, 5 level programming
- 5 software versions : Indicator, Multisetpoint, Grouping, etc
- RS485 with MODBUS RTU
- FDA21CFR Part11 compliant SCADA version
- 85~265 VAC SMPS or 24 VDC supply

Additional features for Tmax version

- Password protection for program mode
- 4~20 mA output

8 - CHANNEL SCANNER

ISOTHERM

- Upto 8 inputs / 4 relays / 2 isolated 4~20 mA outputs
- Universal input
- 3 key, 5 level programming
- Setpoint and level locks
- RS485 with MODBUS RTU
- FDA21CFR Part11 compliant SCADA version also
- 85~265 VAC SMPS or 24 VDC supply
- 96x96x220 mm

COMMUNICATION PRODUCTS

LOOP POWERED INDICATORS

SD201

SD202

PLD40

PLD40

PLD40

Model	Size hxwxd mm	Input	Mounting	Loop Drop	Display	Remarks
SD201	80x120x55	4~20 mA	Field / wall mount	<1V	LCD, 12.7 mm x 3.5 digit	0.025% accuracy, very low loop drop
SD202	80x120x55	4~20 mA	Field	<1V	LCD, 50.8 mm x 3.5 digit	0.025% accuracy, very low loop drop
PLD40	142x84	4~20 mA	2" Pipe, FLP	5V	LED, 14.2 mm x 4 digit	Programmable, 0.1% accuracy, square root function
PLD40	55x82x80	4~20 mA	Field / wall mount	5V	LED, 14.2 mm x 4 digit	Programmable, 0.1% accuracy, square root function
PLD40	48x96x35	4~20 mA	Panel mount	5V	LED, 14.2 mm x 4 digit	Programmable, 0.1% accuracy, square root function

CONTROL PANELS

PANELS AS PER YOUR REQUIREMENTS

- VFD control panel
- Heater control panel
- Hydraulic power pack control panel
- Test bench
- Signal isolator panel
- PLC control & monitoring panel
- Starter panel
- Alarming panel
- Scanner control panel
- FLP instrument control panel
- FRP instrument panel
- Annunciator panel
- Pressure gauge panel
- DDC/HVAC panel
- MCC/PCC panel
- Gas detection panel

EMS

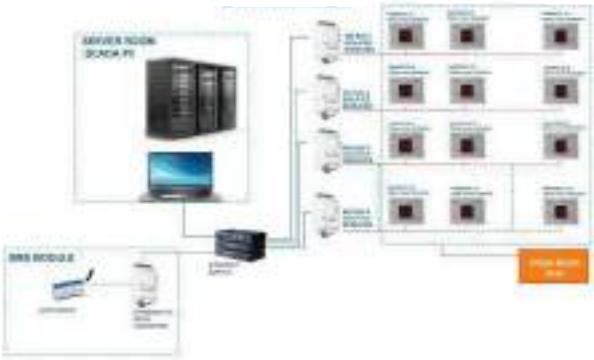

BMS

ENERGY MONITORING SYSTEMS

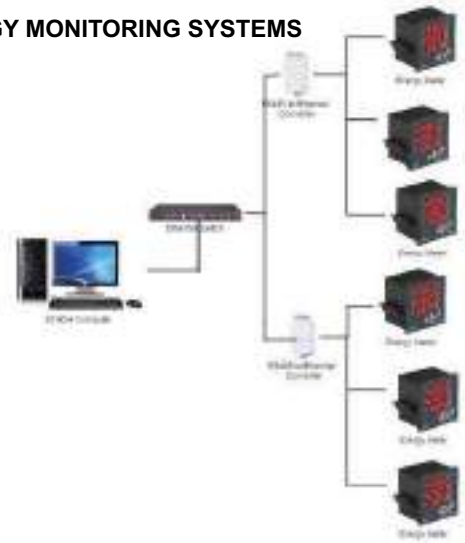

PROCESS MONITORING SYSTEMS

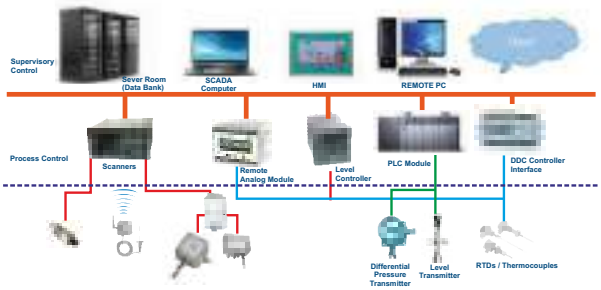

DATA ACQUISITION SYSTEMS

ONLINE-OFFLINE REDUNDANT SYSTEMS

AUTOMATION

TIMERS, COUNTERS & RATE INDICATORS

RCT203

RCT206

RCT301

RCT403

T25

Product	Model	Size hxwxd mm	Setpoints	Retransmission Output	Supply	Display Digits	Non-volatile Memory	Remarks
RPM/Rate indicator with totaliser	RCT203	48x96x100	0	0	85~265 VAC OR 24 VDC	6	Yes	–
RPM/Rate indicator with alarms	RCT206	48x96x100	2	1	85~265 VAC OR 24 VDC	6+6	No	–
Preset counter with RPM/Rate indicator	RCT301	72x72x100	2	1	85~265 VAC OR 24 VDC	6+6	Yes	–
Preset counter	RCT403	72x72x100	1	0	85~265 VAC OR 24 VDC	6	Yes	Pushwheel switch, 6-digit
Multifunction memory timer	RCT601	48x48x100	2	0	85~265 VAC	4	Yes	9 ranges, 4 functions, configurable control inputs
Multifunction memory timer	RCT602	48x48x100	2	0	85~265 VAC	4+4	Yes	9 ranges, 12 functions, configurable control inputs
Multifunction memory timer	RCT604	72x72x100	2	0	85~265 VAC OR 24 VDC	4	Yes	9 ranges, 4 functions, configurable control inputs
Multifunction memory timer	RCT606	72x72x100	1	0	85~265 VAC OR 24 VDC	4	Yes	Pushwheel switch, configurable control inputs
Multifunction non-memory timer	RCT702	48x48x100	2	0	85~265 VAC	4+4	No	9 ranges, 12 functions, configurable control inputs
Digital Din rail timer	T25	80x25x85	2	0	20~265 VAC/DC, 50/60 Hz	2	No	Standard, Star/ Delta, Forward / Reverse

SCR POWER REGULATORS

TPR201 WITH 35A

- Single phase
- Control input - Auto - 4~20mA, 0-5 VDC, 1-5 VDC, 0-10VDC, 2-10 VDC
- Analog

TPR201/50/60/80/100A

- Three Phase
- Control input - Auto - 4~20mA, 0-5 VDC, 1-5 VDC, 0-10VDC, 2-10 VDC
- Phase angle control
- Analog

TPR30160A to 180A

- Single & Dual Phase
- Control input - Auto - 4~20mA, 0-5 VDC, 1-5 VDC, 0-10VDC, 2-10 VDC
- Analog

DPU SERIES

- Three Phase
- Control input - Auto - 4~20mA, 0-5 VDC, 1-5 VDC, 0-10VDC, 2-10 VDC
- Phase angle and zero cross over control
- RS485 Communication
- Digital Display

radix®

FLAMEPROOF, WEATHERPROOF PRODUCTS

TEC302

NEX207

DPT511

TX3DR

FLP TC49SU

X96P

Product	Model	Setpoints	Display Digits	RS485 / MODBUS RTU	Supply	Gas groups	Degree of protection	Mounting
TEMPERATURE CONTROLLERS								
Autotune PID Controller	X96P	5	4+4+3	Yes	85-265 VAC or 20-35 VDC	I, IIA, IIB	IP 65, FLP	Wall
PID, ONOFF controller	NEX207	5	4+4	Yes	85-265 VAC or 20-35 VDC	I, IIA, IIB , IIC	IP 66, FLP	Wall
ONOFF CONTROLLER								
Differential temperature controller	X96Δ	4	4+4+4	Yes	85-265 VAC or 20-35 VDC	I, IIA, IIB	IP 65, FLP	Wall
SCANNER								
Multi-channel scanner	ISOSCAN	16	4.5+4.5+2	Yes	85-265 VAC or 20-35 VDC	I, IIA, IIB	IP 55, FLP	Wall
FLOWRATE INDICATOR / TOTALIZER								
Flowrate indicator / totalizer	FLT601	4	8+6 / 6+4	Yes	85-265 VAC or 20-35 VDC	I, IIA, IIB	IP 65, FLP	Wall
RPM / RATE INDICATORS, TIMERS, COUNTERS								
Programmable rate indicator	RCT202	0	4	NO	85-265 VAC or 24V DC	I, IIA, IIB	IP 65, FLP	Wall
RPM / Rate indicator with alarm	RCT206	2	6+6	NO	85-265 VAC or 24V DC	I, IIA, IIB	IP 65, FLP	Wall
Preset counter with rate indicator	RCT301	2	6+6	NO	85-265 VAC or 24V DC	I, IIA, IIB	IP 65, FLP	Wall
Multifunction memory timer	RCT605	2	4+4	NO	85-265 VAC or 24V DC	I, IIA, IIB	IP 65, FLP	Wall

Product	Model	Input	Output	Input / Output Isolation	Supply	Local Display	Gas groups	Degree of Protection	Mounting
ISOLATORS, TRANSMITTERS									
2-wire Programmable, Isolated Temperature Transmitter	TX3DR	Universal	4~20 mA	YES	11~32 VDC loop supply	4 digit LED	I, IIA, IIB & IIC	IP 66, FLP	2” pipe
2-wire Temperature Transmitter	TX1HM	Pt100	4~20 mA / 20~4 mA	NO	6.2~32 VDC loop supply	LED for Power On status	I, IIA & IIB	IP 65, FLP	2” pipe
2-wire Temperature Transmitter	SCC633	Universal	4~20 mA	YES	10.5~45 VDC	Backlit LCD display	I, IIA & IIB	IP 65, FLP	Field
2-wire RH+T Transmitter	SC804	RH+T sensor	2 x 4~20 mA	NO	11.5~32 VDC loop supply	4 digit LED	I, IIA, IIB & IIC	IP 66, FLP	Surface
2-wire RH+T Transmitter	SC806	RH+T sensor	2 x 4~20 mA	NO	4.5~32 VDC loop supply	NA	I, IIA & IIB	IP 66, FLP	Wall, Duct
RH+T Transmitter	RHT811	-	2 x 4~20 mA / 0~10 V	NO	18~36 VDC / 20~32 VAC	Dual 4 digit LCD	I, IIA & IIB	IP 66, FLP	Surface
DP Transmitter	DPT511	-	2 x 4~20 mA / 0~10 V	NO	18~36 VDC / 20~32 VAC	Dual 4 digit LCD	I, IIA & IIB	IP 66, FLP	Surface
2-wire DP Transmitter	DPT501	-	4~20 mA	NO	12~32 VDC	Dual 4 digit LCD	I, IIA & IIB	IP 66, FLP	Surface
RH+T CONTROLLER									
RH+T Onoff Controller	HX96A	Remote sensor	4~20 mA	YES	85~265 VAC OR 20~30 VDC	4 digit LED	I, IIA & IIB	IP 65, FLP	Wall
LOOP POWERED INDICATORS									
Loop Powered Indicator	PLD40	4~20 mA	–	NA	NA	4 digit LED	I, IIA, IIB & IIC	IP 66, FLP	2” pipe

TECHNICAL SUPPORT

Our in-house team of 100 process instrumentation engineers is available to help you in selecting the right products for your demanding applications.

- Application assistance
- Product selection
- Formal quotation
- Dedicated service team
- Installation & usage guidance

OUR FEW MARQUEE CUSTOMERS - BEST AND BIGGEST

radix®

UNMATCHED SALES & SUPPORT

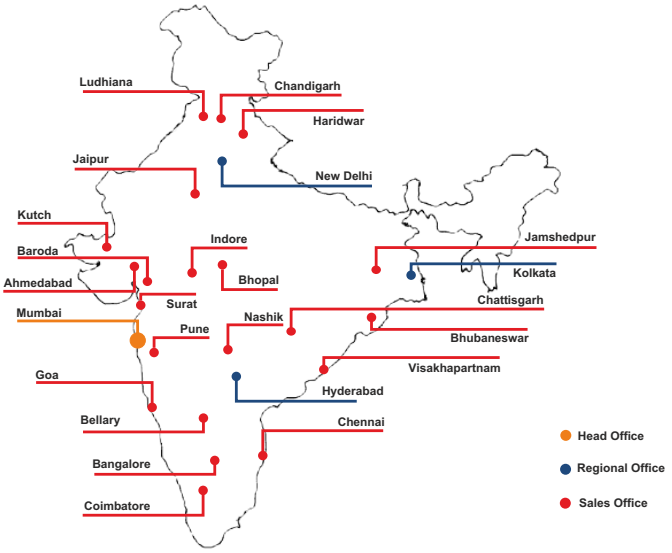

CONTACT INFORMATION

POWER CORPORATION
302, Mayu Tower, Near Shyamal Row Houses, Satellite, Ahmedabad-380015
Email: rudresh@powercorporation.in, powercorporation1@gmail.com
Mobile: 9376181613 Website: www.powercorporation.in